INSTALLATION AN OPERATION
FOR SEA TEL MODEL
COASTAL 18 SATELLITE TV RECEIVE-ONLY ANTENNA
WITHOUT POLARIZATION

Please record your Antenna Serial Number Here;

Antenna Size: _____ Serial Number: _____

Sea Tel, Inc.
4030 Nelson Avenue
Concord, CA 94520
Tel: (925) 798-7979
Fax: (925) 798-7986
Email: seatel@seatel.com
Web: www.seatel.com

Look to the Leader. Look to Sea Tel.

Sea Tel Europe
Unit 1, Orion Industrial Centre
Wide Lane, Swaythling
Southampton, UK S0 18 2HJ
Tel: 44 (0)23 80 671155
Fax: 44 (0)23 80 671166
Email: europe@seatel.com
Web: www.seatel.com

February 21, 2006

Document. No. 124769
Revision A

Sea Tel Marine Stabilized Antenna systems are manufactured in the United States of America.

Sea Tel is an ISO 9001:2000 registered company. Certificate Number 19.2867 was issued August 12, 2005. Sea Tel was originally registered on November 09, 1998.

The Coastal Series of Marine Stabilized Antenna Pedestals with Antenna Control Panel complied with the requirements of European Norms and European Standards EN 60945 (1997) and prETS 300 339 (1998-03) on June 30, 1999. Sea Tel European Union Declaration of Conformity for this equipment is contained in this manual.

Copyright Notice

Sea Tel®

Marine Stabilized Antenna Systems

European Union Declaration of Conformity

Marine Navigational Equipment

The EU Directives Covered by this Declaration:

European Norms and European Standards EN 60945 (1997) and prETS 300 339 (1998-03).

The Product Covered by this Declaration:

Coastal Series Family of Marine Stabilized Antenna Pedestals with Antenna Control Panel.

The Basis on which Conformity is being Declared:

The product identified above complies with the requirements of the above EU Directives by meeting the following standards:

*** EN 60945 (1997) "Marine Navigational Equipment - General Requirements – Methods of Testing and Required Test Results":**

- Conducted Emissions (Clause 9.1 & 9.2)
- Radiated Emissions (Clause 9.1 & 9.3)
- Conducted Low Frequency Interference (Clause 10.1 &10.2)
- Conducted Radiofrequency Interference (Clause 10.1 &10.3)
- Radiated Radiofrequencies (Clause 10.1 &10.4)
- Fast Transients on Signal/Control Lines (Clause 10.1 & 10.5)
- Electrostatic Discharge (Clause 10.1 & 10.9)
- Compass Safe Distance (Clause 11.2, Measurement Only)

*** prETS 300 339 (1998-03) Electromagnetic compatibility and Radio spectrum Matters (ERM); General ElectroMagnetic Compatibility (EMC) for Radio Communications Equipment.**

- Antenna Port Spurious Emissions (Clause 8.4)
- RF Radiated Field Immunity (Clause 9.3)
- RF Common Mode Immunity (Clause 9.4, 9.5 & 9.6)
- Electrical Fast Transient/Burst Immunity (Clause 9.8)
- Lightning Surge Immunity (Clause 9.8)

The technical documentation required to demonstrate that this product meets the requirements of the EMC Directive has been compiled by the signatory below and is available for inspection by the relevant enforcement authorities. The CE mark was first applied to this equipment in 2005.

Authority: Mr. J. Patrick Matthews
President

Signature: _____
Date: 7/27/05

Attention

The attention of the specifier, purchaser, installer or user is drawn to special measures and limitations to use which must be observed when the product is taken into service to maintain compliance with the above directives. Details of these special measures and limitations are in the product manual.

TVRO LNBs which are mounted on the Marine Stabilized Antenna Pedestal must be CE marked separately by the manufacturer of those components.

Sea Tel, Inc.
4030 Nelson Ave.
Concord, CA. 94520
Phone: (925) 798-7979
Fax: (925) 798-7986

CE

Doc 124663-A

Revision History

REV	ECO#	Date	Description	By
A	N/A	February 17, 2006	Initial production release.	MDN

Table of Contents

Table of Contents

Table of Contents

Table of Contents

This Page Intentionally Left Blank

1. Introduction

1.1. General System Description

Your system includes a fully stabilized antenna that has been designed and manufactured so as to be inherently reliable, easy to maintain, and simple to operate. The equipment essentially permits unattended operation except for start-ups or when changing to different transponders, or satellites.

1.2. Purpose

This shipboard TeleVision Receive Only (TVRO) system provides you with maritime satellite TV programming while you are inport or underway. Your Coastal Antenna system will receive signals of adequately high E.I.R.P. levels (see the Specifications section of this manual), in linear or circular polarization mode (with the appropriate LNB fitted) from any of the geosynchronous TV satellites at Ku-band. This input will be distributed to all of your satellite TV receivers which will provide the Audio/Video to your televisions. Many satellites also provide CD quality audio programming which may also be routed to your stereo.

1.3. System Components

The Coastal system consists of two major groups of equipment; an above-decks group and a below-decks group. Each group is comprised of the items shown, and listed, below. All equipment comprising the Above Decks is incorporated inside the radome assembly and is integrated into a single operational entity. For inputs, this system requires only an unobstructed line-of-sight view to the satellite and DC electrical power. The IF signals from the antenna are distributed to the satellite receivers by the matrix switch. Video and Audio inputs to your Television(s) are provided by your satellite receiver(s).

For more information about these components, refer to the Basic System Information section of this manual.

A. Above-Decks Equipment (ADE) Group

1 Stabilized antenna pedestal with built-in GPS

1 Antenna Reflector

2 Manual Polarization Feed Assembly with LNB

3 Radome Assembly

B. Below-Decks Equipment Group

4 DACP Display Antenna Control Panel

5 2 or 4 input ***active*** Matrix Switch with desired number of outputs (one output to each of the installed satellite receivers).

6 Satellite Video Receiver(s) & Television(s)

7 Control, RF and Video cables

1.4. General scope of this manual

This manual describes the Sea Tel Coastal Antenna (also called the Above Decks Equipment), its operation and installation. Your system may contain other Below Deck Equipments which your dealer provided to you. Refer to the manuals for those equipments for their installation and operating instructions.

1.5. Quick Overview of contents

The information in this manual is organized into chapters. Operation, basic system information, installation, setup, functional testing, maintenance, specifications and drawings relating to this TVRO Antenna are all contained in this manual

2. Operation

Detailed information on operating your Coastal Series antenna from the control panel is contained below. For quick reference information, please refer to the laminated card titled “Quick Start Operation” or the previous section.

2.1. Normal Operation Flowchart

The flowchart below is a quick reference from Power ON to Normal Operation Tracking a satellite. The paragraphs following this flowchart explain these phases in more detail.

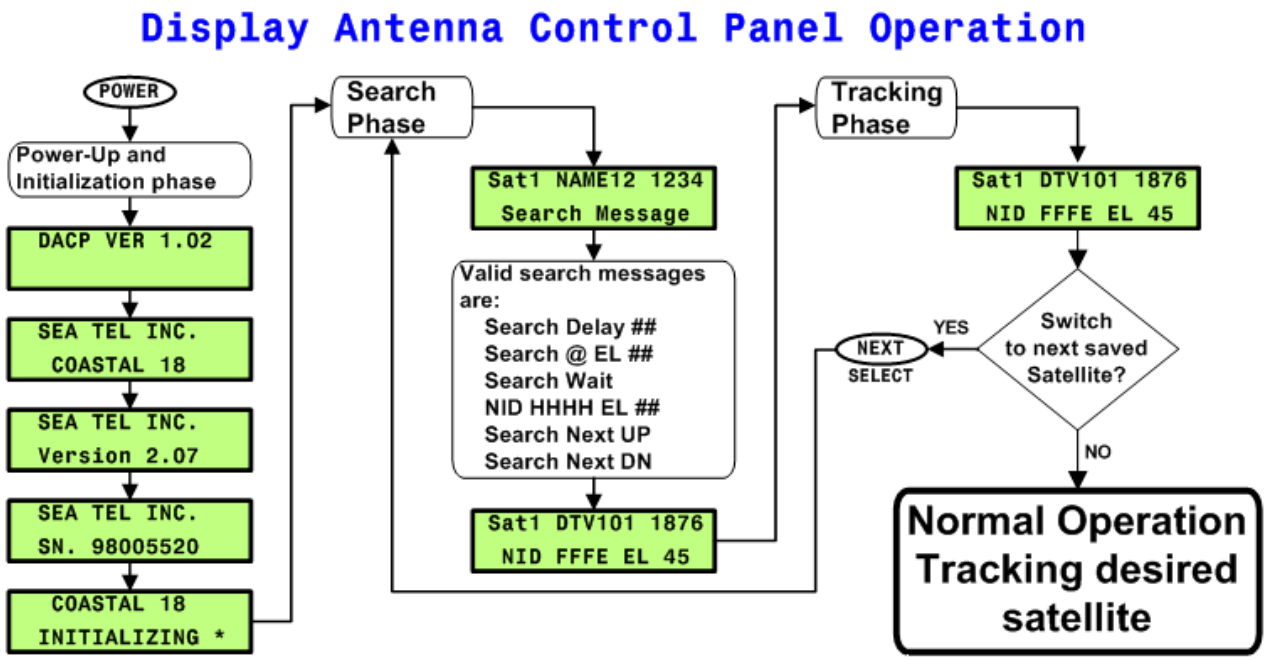

Figure 2-1 Display Antenna Control Panel – Operation Flowchart

2.2. System Start-Up

Normal operation begins by pressing the **POWER** key and waiting for the antenna to automatically acquire and track the desired satellite signal. After the system has been properly installed and set up, this initialization should take approximately 1 minute. The following displays may be seen during the start-up of the system.

Figure 2-2 Display Antenna Control Panel

2.2.1. Power-up/Initialization Phase

```
SEA TEL INC.
SN. 98005520
```

Second line will display the antenna pedestal serial number that has been saved in the Pedestal Control Unit (PCU), for a few seconds.

```
 COASTAL 18
INITIALIZING ✳
```

The Model number that has been saved in the PCU will be displayed on the top line. “INITIALIZING” followed by a “**o**” until the GPS has a valid position. When the GPS has a valid position “INITIALIZING ✳” is displayed.

2.2.2. Search phase

```
Sat1 NAME12 1234
 Search Message
```

1

First line of the display will be comprised of:

1 **Sat1, Sat2, Sat3, Sat4, Sat5** or **Sat6**.

2 **NAME12** is the 6 character name of the satellite being searched for (1 of 6 saved satellites). If satellite information has been entered (see SETUP MODE) the name of the selected saved satellite(s) will be displayed.

3 **1234** will be the actual value of signal level being received (AGC).

Second line of the display may display any one of the following search messages:

4 **Search Delay ##** - Number value while the antenna is delaying.

5 **Search @ EL 35** - System is conducting a linear search at the Elevation angle displayed.

6 **Search Wait** - Indicates that a signal has been detected and the antenna is peaking the signal level.

7 **NID HHHH EL ##** - Will be displayed whenever a satellite signal is found. This message is comprised of Network ID and the Elevation for the satellite being targeted or which satellite has been found. **HHHH** is the 4 digit HEX value of the Network ID reported by the Satellite Identification Receiver in the PCU. If satellite information has been previously saved and matches the satellite found, the system will immediately go into TRACKING mode and display this information. If this is NOT the desired satellite the system will continue searching by displaying "Search Next UP" or "Search Next DN".

8 **Search Next UP** - Will be displayed whenever the system conducts a search for the next satellite UP (CW/Right) from the satellite location it was previously at. This search may be initiated automatically or when the operator presses the NEXT key.

9 **Search Next DN** - Will be displayed whenever the system conducts a search for the next satellite DOWN (CCW/Left) from the satellite location it was previously at. This search may be initiated automatically or when the operator presses the NEXT key.

2.2.3. Tracking phase

```
Sat1 DTV101 1876
 NID FFFE EL 45
```

2

First line of the TRACKING display will be the information for the satellite which is currently being tracked. In the display example above, the system is tracking the Sat1 satellite selection, named DTV101 (DirecTV at 101W) with a signal strength of 1876 counts of AGC.

Second line of the TRACKING display is the NID currently being received (FFFE) and the current Elevation angle of the antenna (45 degrees).

This display indicates that the system has now entered into OPERATION mode. TRACKING LED is ON.

2.3. Operation Mode Scenerios

Below are some common examples of operating the system when Sat1, Sat2, Sat3, Sat4, Sat5 and Sat6 information has been saved. You can also refer to the Operation Flow Chart. If satellites have not been previously saved, refer to Section 5 – Initial Setup.

2.3.1. Switching Satellites

Press NEXT to switch to the next (numerically) satellite.

2.3.2. Adjusting Polarization

Polarization adjustment is NOT required when you are outfitted for circular satellite usage.

If you have a Linear LNB installed, you will have to manually adjust the polarization. Manual adjustment will be required whenever the boat has traveled about 10 degrees of latitude or longitude from where you last adjusted the linear polarization.

2.4. Linear Polarization Adjustment

Polarization is adjusted for a desired satellite when the system is initially installed. Subsequently it needs only to be adjusted when changing from one satellite to another, or when the boat has traveled a significant geographic distance. It should NOT need to be re-adjusted if the boat stays in the same location and is operating on the same satellite.

Polarization of your Series 98SL antenna must be accomplished manually. Each time you need to adjust the polarization you will have to take the radome top off, loosen the LNB mounting set screws and rotate the LNB. When you have optimized the polarity, tighten the set screws and put the radome top back on.

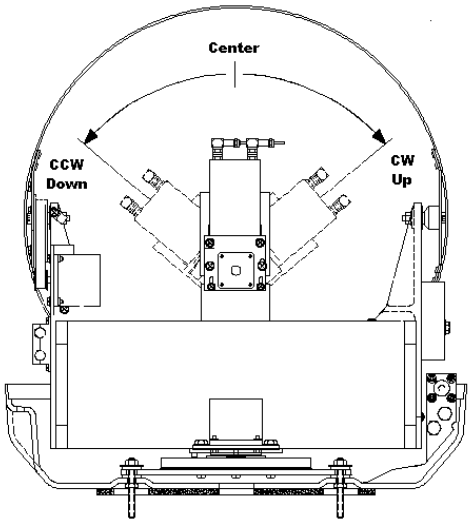

Figure 2-3 LNB rotation during polarization adjustment

The adjacent figure shows the rotation of the LNB assembly mounted on the back side of the dish as it would be seen if observed while polarization is being adjusted. As the polarization is mis-adjusted, the signal level will degrade. If it is mis-adjusted far enough, the signal will be completely lost.

Note: The polarization entry from the Antenna Control Panel will ***NOT*** electrically rotate your LNB. Each momentary keypress of the ▲ (POL UP), or ▼ (POL DOWN), will increment/decrement the ***displayed value*** but will ***NOT*** rotate the LNB.

The antenna reports that it is tracking a good signal by displaying a steady (ON) TRACKING LED. If you determine that the satellite signal is not the desired satellite, press the NEXT key to search for the NEXT satellite signal. Continue repeating this procedure until the correct satellite is found. Once the correct satellite has been found, allow the antenna to track for 4-6 minutes to update the satellite position information.

2.4.1. Optimizing the polarization while on the desired satellite

This adjustment should be done while the boat is at the pier and antenna is tracking the desired satellite. When the boat is travelling to a different geographic area the polarization may need to be re-optimized if performance appears to be degrading.

Select the “Signal Strength” display of the satellite receiver (refer to the satellite receiver manual). While monitoring the receivers’ signal strength, adjust polarization up or down in one (or two) degree increments, then observe the receivers’ signal strength for 10-15 seconds to evaluate the change. If an improvement is noted, continue small adjustments in the same direction until the highest signal strength is obtained. If the adjustment causes a decrease, adjust polarization in the opposite direction to increase the signal strength. When the polarization of the antenna is optimum, tighten the set screws and

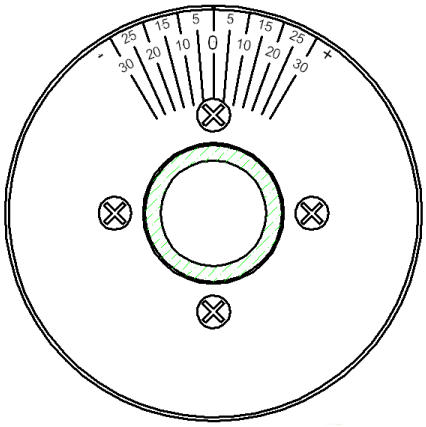

Figure 2-4 LNB rotation during polarization adjustment

re-install the radome top.

2.4.2. Setting polarization for a different satellite (changing satellites)

When changing from one satellite to another you may need to adjust the polarization of the LNB to be able to acquire the satellite you want to switch to. This will only be required if the difference in polarization angle of the two satellites is greater than ten degrees.

1 Assure that you have optimized the polarization for the satellite you are presently on using the procedure in 2.4.1.

2 Compare the longitude of the satellite you are presently on to the longitude of the satellite you will be switching to. Note the amount & direction of the difference in longitude position of the two satellites. Adjust the polarization 10 degrees for each 10 degrees of longitude difference between the two satellites. If the satellite you are switching to is further East from the present satellite you will need to adjust polarization DOWN the appropriate number of degrees. If the satellite you are switching to is West from the present satellite you will need to adjust polarization UP the appropriate number of degrees. Examples:

> Presently optimized on Astra 1 at 19.2E and want to switch to Hotbird at 13.0E. Difference is less than 10 degrees, so no adjustment is necessary before searching for the next satellite (step 4).
>
> Presently optimized on Astra 1 at 19.2E and want to switch to Astra 2 at 28.2E. Difference is about 10 degrees East. You need to rotate the LNB (POL DOWN) 10 degrees and then search for the next satellite (steps 3 & 4).
>
> Presently optimized on Astra 1 at 19.2E and want to switch to Thor 1 at 0.8W. Difference is about 20 degrees West. You need to rotate the LNB (POL UP) 20 degrees and then search for the next satellite (steps 3 & 4).

3 Adjust polarization UP/DOWN the amount determined in step 2.

4 Press NEXT to search for the next satellite. If the next satellite found is not the desired satellite, press NEXT to continue searching. Repeat searching until the desired satellite is found. Allow the antenna to track the satellite for about two minutes.

5 Optimize polarization while on the new satellite using the procedure in 2.3.1.

If you will be changing satellites periodically to view different programming, note the polarization for each of the satellites you will be using. It may also be helpful to record the elevation of the satellites you will be using. Setting the elevation and polarization before searching for the next satellite will help shorten the search process. Elevation of the satellite(s) may be entered & saved using SETUP Mode.

2.4.3. Setting polarization when you have changed geographic areas

If the boat is travelling a great distance it is recommended that you optimize the polarization using the procedure in 2.4.1 after each 10 degree latitude or longitude change. If you have changed latitude and longitude by a significant geographic distance, while the antenna has been turned off, it may be necessary to adjust the polarization to find the desired satellite.

If you are able to find (and identify) a satellite, optimize the polarization and follow the procedure in section 2.4.2 to change from the satellite you are presently on to the one you desire to be using. If you are not able to find any satellites, adjust polarization up or down 10 degrees and press NEXT to search for a (next) satellite signal. Continue adjusting polarization and searching, until a satellite signal is found and you can follow the procedure in section 2.4.2 to change from the satellite you are presently on to the one you desire to be using.

If after all polarization settings have been tried and no satellite signal can be found, refer to the Troubleshooting section of this manual.

2.5. Loss of satellite due to blockage or rain-fade

If tracking is lost due to blockage or rain fade, the antenna will search until a signal is found which is high enough for the antenna to begin tracking. When the receiver interface is operating properly, the antenna will automatically continue searching until it has acquired the desired satellite.

2.6. Low Noise Block Converter Operation

There are no operating instructions or controls applicable to the LNB. This unit is energized whenever the matrix switch and satellite receiver(s) have AC power connected to them.

Satellite signals are either circular polarized (spiraling plane down from the satellite) or linear polarized (fixed plane down from the satellite). The pedestal will receive circular polarization signals when a circular LNB is installed on the back of the dish. Conversely, the pedestal will only receive linear polarized signals when a linear LNB is installed.

2.7. Radome Assembly Operation

When operating the system it is necessary that the radome top be properly installed at all times. This prevents rain, salt water and wind from entering the radome. Water and excessive condensation promote rust & corrosion of the antenna pedestal and wind gusts would disturb the antenna pointing.

There are no other operating instructions applicable to the radome assembly by itself.

3. Basic System Information

This section provides you with some additional information about the satellites you will be using, basics of the your antenna system and other equipment within your system configuration.

3.1. Satellite Basics

The Television Receive Only (TVRO) satellites are in orbit at an altitude of 22,753.2 Miles (36,600 kilometers) and positioned directly above the equator. Their orbital velocity matches the Earth's rotational speed, therefore, each appears to remain at a fixed position in the sky (as viewed from your location).

3.1.1. Ku-Band Frequency (10.95-12.75GHz) Satellites

Your antenna can be used with any of the Ku-Band (10.95-12.75GHz or a portion of these frequencies) satellites that provide a strong enough receive signal level. The Low Noise Block Converter (LNB) installed on your antenna determines the exact frequency range you are currently able to receive. Other frequency range LNBs are available for use with your antenna.

At these frequencies the signal from the satellite travels only in a straight line and is affected by weather changes in the atmosphere. There are several conditions that can cause a temporary loss of satellite signal, even within an area where the signal level is known to be adequate. The most common of these *normal* temporary losses are **blockage** and **rain fade**. They will interrupt services only as long as the cause of the loss persists.

3.1.2. Blockage

Blockage is loss due to an object in the path of the signal from the satellite to the dish. If an object that is large and dense is positioned in the path of the signal from the satellite, it will prevent sufficient signal from arriving at the dish. The signal can not bend around, or penetrate through, these objects and the reception will be degraded or completely interrupted. The dish is actively driven to remain pointed at the satellite (toward the equator) so, as the boat turns a mast or raised structure of your boat may become positioned between the satellite and the dish. Blockage may also be caused a person standing near the radome, tall mountains, buildings, bridges, cranes or other larger ships near your boat. Signal will be lost when the boat is housed inside an enclosure that the signal cannot penetrate, like a paint shed or a berth with a roof. Moving or rotating the boat to position the antenna where it has an unobstructed view to the desired satellite will restore the antennas' ability to receive the satellite signal.

3.1.3. Rain Fade

Atmospheric conditions that may cause sufficient loss of signal level include rain, snow, heavy fog and some solar activities (sun spot and flare activity). The most common of these is referred to as "rain fade". Rain drops in the atmosphere reduce the signal from the satellite. The heavier the rain the higher the amount of signal loss. When the amount of loss is high enough, the antenna will not be able to stay locked onto the satellite signal. When the amount of rain has decreased sufficiently, the antenna will re-acquire the satellite signal. In a strong signal area, rain fall of about four inches per hour will cause complete loss of signal. In weaker signal areas the effects would be more pronounced.

3.1.4. Signal level

The level of the receive signal is dependant upon how powerful the transmission is and how wide the signal beam coverage area is. Focusing the signal into a narrower beam concentrates its energy over a smaller geographic area, thereby increasing the signal level throughout that area of coverage. This makes it possible for you to use a smaller antenna size to receive that satellite signal. Your antenna system must be geographically located in an area where the satellite signal level is high enough to provide suitable reception. This limits the number of satellites that can be used and the geographic areas

where the boat can travel where the signal level is expected to be strong enough to continue providing uninterrupted reception. When travelling outside this minimum signal coverage area, it is normal for the system to experience an interruption in its ability to provide the desired satellite services until entering (or re-entering) an area of adequate signal level (refer to the satellite footprint information in the Drawings section of this manual).

3.1.5. Satellite Footprints

The focused beam(s) from the satellites are normally aimed at the major landmasses where there are large population centers. Footprint charts graphically display the signal level expected to be received in different geographic locations within the area of coverage. The signal will always be strongest in the center of the coverage area and weaker out toward the outer edges of the pattern. The coverage areas are intended to be a guide to reception, however, the actual coverage area and signal level may vary. Also the signal strength is affected by weather.

3.1.6. Satellite Footprint Charts

A Satellite Footprint Chart is a drawing of signal level in a geographic region. You can refer to satellite footprint charts (coverage maps) in World Satellite Almanacs or on the Internet (www.SatCoDX.com or www.Lyngsat.com). Many satellites have their own web sites to provide programming and footprint information. To use these footprint charts you will need to know the minimum EIRP signal level required for your antenna (refer to the Specifications – Antenna section of this manual).

Contact your dealer for a footprint chart(s) of the satellite(s) you will be using with your model antenna. These footprint charts show the locations where signal level is expected to be adequate for TV reception with your model antenna.

Please note that while the coverage area information is believed to be correct, Sea Tel has no control over actual satellite operation, footprint coverage, or programming. The coverage maps are intended as a guide to reception and the actual coverage area and signal strength may vary. Also, signal strength and reception within the footprint may be affected by weather.

3.1.7. Satellite polarization

Satellites may transmit their signals in one of two different polarization modes. Your antenna is designed to operate with **linear OR circular** polarized satellite transmissions, but you must have the appropriate LNB installed for the satellite that you want to receive.

Circular polarized satellite transmissions do not require polarization adjustment to optimize the reception. **Linear** polarized satellite transmissions require periodic adjustment of "polarization" to optimize the alignment of the LNB to the angle of the signal from the satellite.

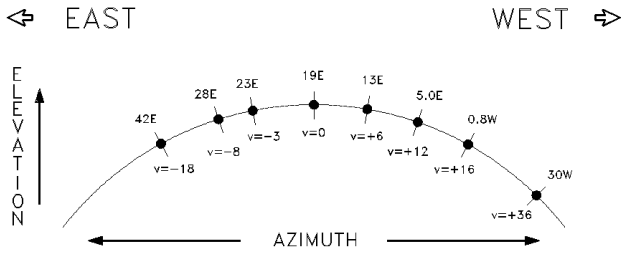

Figure 3-1 Satellite Signal Polarization

Your antenna is designed to automatically adjust the polarization, even when you have a circular LNB installed. When you are operating with **linear** polarized satellite transmissions the auto-polarization is periodically adjusting the **linear** LNB "polarization" to optimize the alignment of the LNB to match the angle of the signal from the satellite.

When you are on the same longitude as the satellite, its' horizontal and vertical signals will be purely aligned to your horizon. When the satellite is east or west of your longitude, the satellite signals will appear to be rotated clockwise or counter-clockwise from pure horizontal and vertical. Both horizontal and vertical signals from a satellite will appear to be rotated the same amount and are always perpendicular to each other. The amount of rotation is dependent on how far east or west the satellite is

from you and how close you are to the Equator (refer to the polarization information in the Setup and the Operation sections of this manual).

3.2. Antenna Basics

The following information is provided to explain some of the basic functions of the antenna:

3.2.1. Azimuth

The antenna can rotate a total of 680 degrees between two mechanical stops. Azimuth drive, provided by the azimuth motor, is required during stabilization, searching, tracking and unwrap operations of the antenna. When the boat turns, azimuth is driven in the opposite direction to remain pointed at the satellite. The actual azimuth pointing angle to the satellite is determined by your latitude & longitude and the longitude of the satellite. It is important to know that the antenna should be pointed generally toward the equator.

Refer to figure 3-1. The azimuth would be 180 degrees **true** (relative to true north) if the satellite is at the same longitude that you are on. If the satellite is east, or west, of your longitude the azimuth will be less than, or greater than 180 degrees respectively.

When checking for blockage you can visually look over the antenna radome toward the equator to see if any objects are in that sighted area. If you are not able to find any satellites it may also be useful to remove the radome top to see if the dish is aimed in the correct direction (towards the equator).

3.2.2. Elevation

The antenna can rotate up and down in elevation. Elevation drive, provided by the elevation motor, is required during stabilization, searching and tracking operations of the antenna. The actual elevation pointing angle to the satellite is determined by your latitude & longitude and the longitude of the satellite. In general terms the elevation angle will be low when you are at a high latitudes and will increase as you get closer to the equator.

Refer to figure 3-1. Additionally, from any given latitude, the elevation will be highest when the satellite is at the same longitude that you are on. If the satellite is east, or west, of your longitude the elevation angle will be lower.

3.2.3. Antenna polarization (Linear or Circular)

Your Coastal Series antenna can have a linear, or a circular, LNB installed.

When you are in an area where you want to receive ***linear*** polarized satellite signals, you will have to install a linear LNB. When you have a Linear LNB installed, polarization adjustment is required when initially setting up the system, when changing from one satellite to another and to compensate for the roll and pitch motion of the boat when underway.

Polarization is ***automatically*** adjusted by the system when changing from one satellite to another, periodically as the boat changes geographic locations by a significant amount of latitude and longitude and to compensate for roll and pitch motions of the boat when underway.

The Polarization display will read 000 when the LNB is rotated full CW, 090 when the LNB rotation is centered and 180 when the LNB is rotated full CCW (as viewed from the back of the dish).

When you are in an area where you want to receive ***circular*** polarized satellite signals, you will have to install a circular LNB. When you have a circular LNB installed polarization adjustment is NOT ***required***, however, the auto-polarization function will operate as described above.

3.2.4. Stabilization

Your antenna is a "stabilized" antenna. **Stabilization** is the process of de-coupling the ships' motion from the antenna. Simply put, this allows the antenna to remain pointed at the satellite while the boat turns, rolls or pitches under it. To accomplish this, the **P**edestal **C**ontrol **U**nit (PCU) on the antenna pedestal assembly senses the motion and applies drive to the appropriate motor(s) in opposition to the sensed motion. Azimuth (AZ), Elevation (EL) and Polarization (POL) are actively *stabilized* automatically by the PCU as part of its normal operation.

3.2.5. Search Pattern

When the power is turned on, the system will calculate the Elevation & Polarization of the selected satellite, drive the antenna to the calculated Elevation and adjust the Polarization to the calculated polarization. It will then drive the antenna in a 400 degree Azimuth sweep at the calculated Elevation. The Elevation will be increased and decreased in 4 degree increments after each Azimuth sweep until the selected satellite is found and tracking begins or the system has completed Azimuth sweeps through several Elevations. If the selected satellite is NOT found, the system will re-target and repeat the search. Once the selected satellite is found tracking begins.

If you want to change satellites, press the NEXT key until the desired satellite is displayed. The system will calculate the Elevation, Relative Azimuth and Polarization of the selected satellite and drive the dish directly to the Azimuth and Elevation, and adjust the Polarization, for the new satellite. The new satellite should be acquired and tracking begins. If the satellite is not found a search will begin, as described above.

3.2.6. Satellite Identification Receiver

The Satellite Identification Receiver (Tracking Receiver) located in the Pedestal Control Unit (PCU) is used to acquire, identify and track a specific satellite. To do this the receiver is set-up to a specific ***Frequency***, ***Baud*** rate, ***FEC*** rate and a unique Network ID hexadecimal code (***NID***) setting for ***each*** saved satellite.

During search, if a signal is found, this receiver compares the programmed settings to the present satellite signal values being received. The system will track the satellite while the comparison is being done, If they do NOT match, the search pattern will be continued. If they DO match, Tracking will begin.

Up to six different satellites may be saved for use.

The system should only be set-up for satellites that are going to be used so that you don't have to go through so many choices when switching satellites. Unused satellite setups should be left blank to skip over those choices.

3.2.7. Tracking

The antenna actively optimizes the pointing of the dish for maximum signal reception using a receiver which is built into the Pedestal Control Unit (PCU). This process is called **tracking** and is accomplished by making small trial movements of the dish while monitoring the level of the received signal. Evaluation of this information is used to continuously make minor pointing corrections to keep the signal level "peaked" as part of normal operation.

3.2.8. Unwrap

Mechanical stops limit the azimuth rotation to 680 degrees. When the azimuth rotation is within 5 degrees of either mechanical stop, the antenna will be driven 360 degrees away from that stop. This "unwinds" the cables that are routed through the pedestal assembly and repositions the antenna to a mid-point between the two stops. By rotating 360 degrees the azimuth position of the antenna will have returned to the previous position and will resume normal satellite tracking. Unwrap will occur when the boat continues turning far enough in one direction for it to be required. It is normal for the television picture to "freeze frame" until the antenna completes unwrap and resumes tracking the satellite.

3.3. Components of the System Configuration

The following text provides a basic functional overview of the system components and component interconnection as referred to in the System Block Diagram for your model antenna (refer to the appropriate page which depicts your system configuration).

The system is comprised of two major sections: The Above-Decks Equipment (ADE) is comprised solely of the antenna radome assembly which is mounted outside, on the boats' upper deck or mast location chosen for best satellite reception. The Below-Decks Equipment (BDE) includes a matrix switch, the antenna control panel, satellite receiver(s), TV set(s) and all other ancillary equipment that is mounted in various locations throughout the interior of the boat.

There will be an Antenna Control Cable between the ADE and BDE. This cable supplies the operating voltage to the antenna and allows you to setup and operate the antenna from the Antenna Control Panel. The panel also constantly displays the status of the antenna.

Coax cables between the ADE and BDE provide the received satellite signals from the antenna to the matrix switch. The matrix switch then distributes these satellite signals to the satellite receiver. The satellite receivers convert the satellite signals to provide audio and video to your television and/or stereo.

You will need to have 4 coaxes between the ADE and BDE if you intend to have a Quad (4 output) LNB installed on your antenna at any point in time. Usage of this LNB is very popular in Europe.

If you will only have a dual output LNB installed (linear or circular) you will only need to have 2 coaxes between the ADE and BDE. ***Unused coax connections in the radome MUST be terminated (75 ohm terminators) if not used.***

3.3.1. Antenna Assembly

The antenna radome assembly consists of a satellite antenna and a linear, or circular, Low Noise Block converter (LNB) with polarization motor mounted on a stabilized antenna pedestal, housed inside a radome. The radome provides an environmental enclosure for the antenna pedestal assembly inside it. This keeps wind, water condensation and salt-water spray off the antenna pedestal assembly. This prevents damage and corrosion that would shorten the expected life span of the equipment.

The antenna control cable is connected between the antenna radome assembly and the antenna control panel. This cable provides DC voltage to the antenna and all control signals to and from the antenna.

Two, or Four, RG-6 (or better) coax cables are connected from the antenna radome assembly to the below decks equipment. These cables carry the intermediate frequency (950-2150MHz) signals from the antenna assembly directly to a matrix switch (depending on the configuration), and provide DC voltage and tone switching to the LNB mounted on the antenna. These cables ultimately provide the input signal into the satellite receiver(s) from the matrix switch.

3.3.2. Display Antenna Control Panel

The antenna control panel allows the operator to control and monitor the antenna pedestal with simple dedicated function buttons, LED's and a 2 line display. The control panel can be surface mounted to any convenient panel location. It is recommended that the antenna control panel be mounted near one of the television locations where you can see the television screen while you are controlling the antenna.

The antenna control panel is connected to the antenna and to the +12 VDC power supply.

Figure 3-2 Antenna Control Panel

3.3.3. Power Supply

DC Voltage - Power for the antenna is taken directly from the vessel's 12 volt DC system for maximum power efficiency. At 13.8VDC the nominal current drain required by the antenna is 3.0 Amps.

AC Voltage - An appropriate source of AC Voltage will also be required for the active matrix switch, satellite receivers and television monitors. Refer to the manuals for these devices for voltage and power consumption of each. Total power consumption will depend on the number of satellite receivers and television monitors used.

3.3.4. Satellite Receivers

This antenna can be used with standard satellite receivers, and Integrated Receiver-Decoders (IRD). Both can receive "free" programming, but an IRD is required when the desired programming is encrypted. When authorized, it will decode the encrypted signals for use. Authorizing the receiver-decoder is a process of registering your receiver(s) and paying subscription fees to the service provider. The service provider then arranges for a signal to be sent through the satellite to your receiver-decoder, which will "enable" it to decode the programming you subscribed to.

A coax connection from the antenna (via the matrix switch) provides signal input to the receiver, but the receiver also outputs voltage and tone control to the LNB portion of the feed. A coax connection from the TV OUTPUT jack on the satellite receiver is connected to the ANTENNA INPUT on the television. Alternately, individual audio/video or SCART cable connections may be made between the satellite receiver and the television. Refer to your satellite receiver manuals.

3.3.5. Television/Monitor

An appropriate television monitor is used to view the satellite television programming and to view the on screen displays from the receiver.

3.3.6. Matrix Switch

A matrix switch must be installed with all of the antenna IF coax cables connected to its' LNB inputs. A coax cable (RG-6 or BETTER is recommended) is connected from each matrix switch output to each satellite receiver. Sea Tel recommends that an ***ACTIVE*** Matrix be used in all installations. Matrix switches with 4, 8, 12, 16 or more outputs are available.

Assure that the 18VDC port is connected to the RED coax inside the radome.

4. Installation

Installation of your Coastal Series Antenna system must be accomplished by or under the supervision of an authorized Sea Tel dealer for the Sea Tel Limited Warranty to be valid and in force. Good planning of the installation will provide the best results. Below is some guidance on issues that are important to consider when planning the installation.

Planning is the key to a good installation. Read the installation information below thoroughly before beginning the actual installation. Then review your plan to adjust for any details that may have been overlooked.

A full scale Installation Template (drawing 118092) has been provided to locate the cutout areas and mounting holes for the antenna radome and for the antenna control panel. The radome template section of the drawing includes the outer perimeter of the radome base so you can insure that the radome will fit in the area chosen.

4.1. Site Selection and Cable Routing

Determine the optimum mounting location for the antenna radome assembly. It should be installed where:

1 The antenna has a clear line-of-sight view to as much of the sky as is practical. Choose a location where masts or other structures do not block the satellite signal from the dish as the boat turns.

2 The antenna is at least 5 feet away from other transmitting antennas (HF, VHF and radar) that may generate signals that may interfere with the Coastal Series antenna. The further away the Coastal antenna is from these other antennas, the less impact their operation will have on it.

3 The antenna radome assembly should be rigidly mounted to the boat. If necessary, reinforce the mounting area to assure that it does not flex due to the boat motion or vibration.

Choosing the best mounting location on smaller boats, where there are fewer possible locations to choose from, is frequently a compromise. Figure 4.1 is provided to make some location comparisons. The “poor” location is poor because over half of the antenna’s viewable sky is blocked by the overhang above it. The “better” location has less blockage, but the upper deck and the mast will cause some blockage when the antenna is at lower elevations. The “best” location has no blockage from raised platforms, mast or the body of the radar.

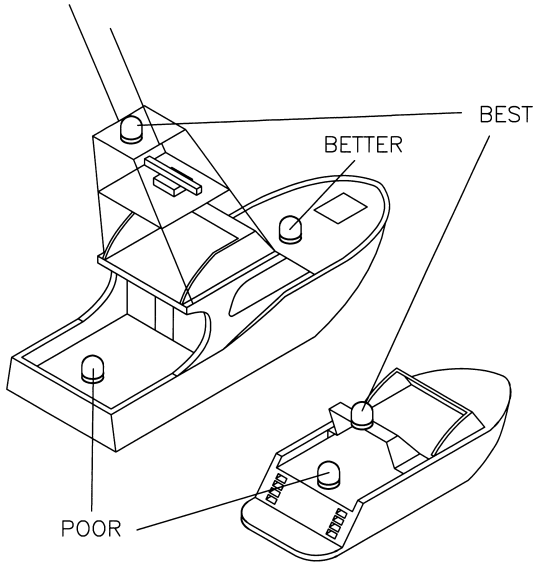

Figure 4-1 Possible Antenna Radome Assembly mounting locations

Antenna Control Panel - The antenna control panel should be mounted in a convenient location for the operation of the antenna system. It should be near one of the satellite receiver/television locations so that the receivers’ TV screen can be viewed while the antenna is being operated. The antenna control cable is routed from the radome to the control panel, so routing path and cable length are also important considerations in choosing the location of the control panel.

Satellite receiver(s) and television set(s) - Satellite receiver(s) and television set(s) should be mounted near each other in convenient viewing locations. If enclosed in a cabinet or panel, assure that there is adequate

airflow to prevent the receiver from over-heating and provide forced airflow if needed. At each receiver location, leave a sufficient length of cable to remove the receiver in order to access its rear panel without pulling connections off of the rear panel.

4.2. Equipment and cable installation

Refer to the System Block Diagram for component interconnection information.

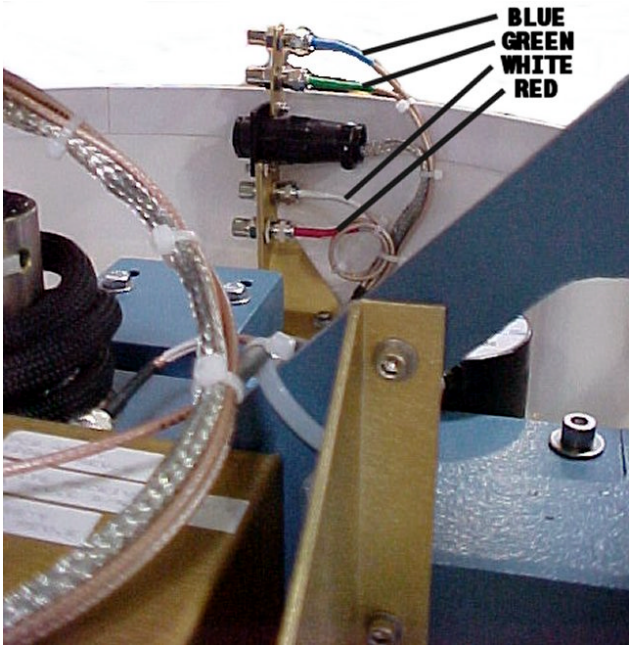

The system is comprised of two major sections: The Above-Decks Equipment (ADE) is comprised solely of the antenna radome assembly which is mounted outside, on the boats' upper deck or mast location chosen for best satellite reception. The Below-Decks Equipment (BDE) includes a matrix switch, the antenna control panel, satellite receiver(s), TV set(s) and all other ancillary equipment that is mounted in various locations throughout the interior of the boat.

There will be an Antenna Control Cable between the ADE and BDE. This cable supplies the operating voltage to the antenna and allows you to setup and operate the antenna from the Antenna Control Panel. The panel also constantly displays the status of the antenna.

Coax cables between the ADE and BDE provide the received satellite signals from the antenna to the matrix switch. The matrix switch then distributes these satellite signals to the satellite receiver. The satellite receivers convert the satellite signals to provide audio and video to your television and/or stereo.

You must install 4 coaxes between the ADE and BDE if you intend to have a Quad (4 output) LNB installed on your antenna at any point in time. Usage of this LNB is very popular in Europe.

If you will only have a dual output LNB installed (linear or circular) you will only need to have 2 coaxes between the ADE and BDE.

The coax connector bracket inside the radome has colored heat-shrink on the coaxes that go through the pedestal. The functional assignment of these colors is:

BLUE - Low Band Vertical

GREEN - High Band Vertical or RHCP

WHITE - Low Band Horizontal

RED - High Band Horizontal or LHCP

NOTE: The **RED** coax connection MUST go to the **18VDC** port of your Matrix switch. This must be the High Band Horizontal input of your **four** port Matrix switch when using a Quad LNB, OR to the LHCP port of your dual input Matrix switch when using a circular LNB.

NOTE: ***Unused coax connections (on the connector bracket) MUST be terminated with a 75 ohm terminator (two are provided).***

4.2.1. Cutouts & mounting holes

1. Using the radome template portion of drawing 118092, mark the mounting holes and cable passage cutout. Drill the mounting holes for the radome. A hole saw may be used to cut out the cable passage (for routing the cables into the base of the radome).
2. Mark the mounting holes and cutout area for the control panel using the antenna control panel template portion of drawing 118092. Cut out the marked area as shown on the template and drill the mounting holes.
3. If necessary, cut out satellite receiver and television monitor mounting locations. Drill mounting holes and cut out/drill cable routing holes.

4.2.2. Cable routing

1. Route the antenna control cable from the antenna radome location to the control panel location. If necessary, disconnect the orange 8-pin screw terminal connector on the free end of the control cable to make cable routing easier. Adjust the cable routing so that 16 inches (40cm) of cable extends beyond the radome base-mounting surface and at least 4 inches (10cm) of cable extends out of the antenna control panel mounting surface.
2. Route the two, or four, RG-6 (or better) coax cables from the antenna radome location to the appropriate matrix switch location(s). Adjust the cable routing so that 16 inches (40cm) of cable extends beyond the radome base-mounting surface and an appropriate amount of excess cable extends from the matrix switch location. NOTE: You may want to color code, or number, your coaxes for proper connection to the matrix switch below decks.
3. Route 16 AWG (1.29mm) or larger gauge wire (fused for 4 Amp or larger) DC power from the boats' batteries or DC voltage supply to the antenna control panel location. Connect +12VDC to Pin 1 and ground to Pin 2 of the orange 2-pin screw terminal connector on the antenna control panel (see figure 4-4 in paragraph 4.2.4). Adjust the cable routing so that at least 4 inches (10cm) of cable extends out of the antenna control panel mounting surface.
4. Route additional coaxes from the matrix switch location to the desired satellite receiver locations as needed for desired configuration. Adjust cable routing for appropriate excess cable at each end.
5. Route AC power to the satellite receiver and television monitor locations as needed.

4.2.3. Radome Mounting and antenna cable connections

1. Refer to the Installation Arrangement drawing. Remove the radome top by removing the four cap nuts from the bolts that thread up into the recess areas of the radome base. Set the radome top and cap nuts aside for later re-use.
2. Remove the 3/8-16 hex jam nuts and washers (four places) from the under-side of the radome base. Gently lift the antenna pedestal assembly out of the radome base.
3. Have the mounting hardware (4 mounting studs, 4 fender washers and 4 nuts) from the installation kit ready for use.

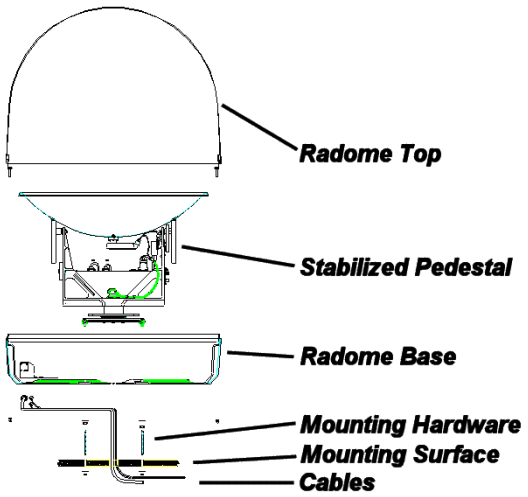

4 Pass the coax and control cables through the hole in the radome base. Connect the antenna control cable and coax cables to the connectors provided on the bracket in the base of the radome. The coax connector bracket inside the radome has colored heat-shrink on the coaxes that go through the pedestal. The functional assignment of these colors is:

BLUE - Low Band Vertical

GREEN - High Band Vertical or RHCP

WHITE - Low Band Horizontal

RED - High Band Horizontal or LHCP

NOTE: The **RED** connection MUST go to the **18VDC** port of your Matrix switch.

NOTE: ***Unused connectors MUST be terminated with a 75 ohm terminator (two are provided).***

5 Set the antenna pedestal in the radome base. Assure that the excess cable length inside the radome does not drag or catch on the antenna pedestal assembly as it rotates inside the radome. The threaded inserts should now be protruding through the radome base.

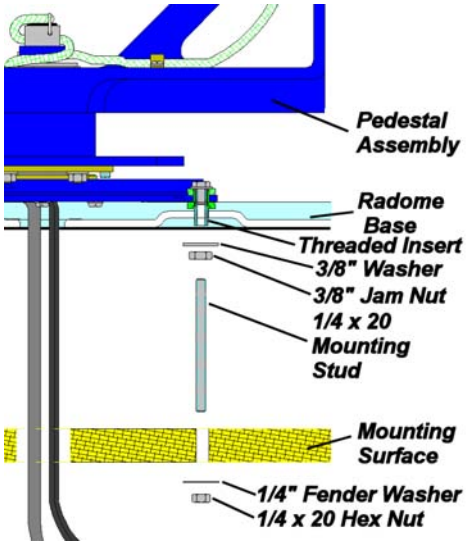

6 Apply Loctite 241 (supplied) to the outer threads of the threaded insert and install the 3/8 washers and 3/8-16 hex jam nuts to the four threaded inserts. This mounts the Pedestal Assembly inside the radome base.

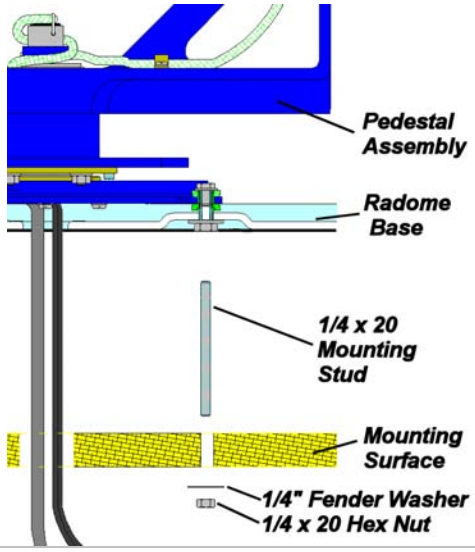

7 Apply Loctite 241 (supplied) to the top of the four ¼" diameter x 4" long mounting studs and install the studs up into the threaded inserts in the antenna pedestal assembly from the underside of the radome base. Thread the stud into the insert until it bottoms.	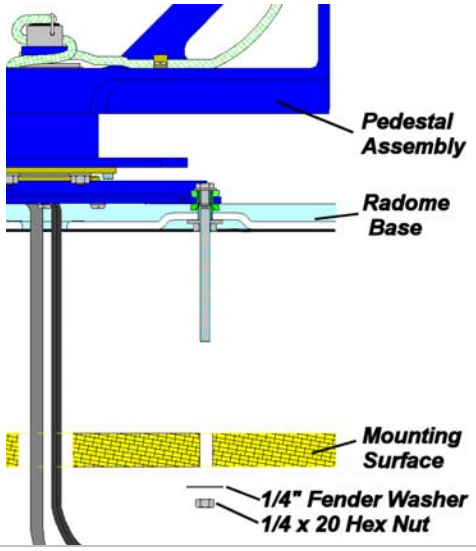
8 Install the radome base assembly onto the vessel by inserting the four mounting studs through the mounting holes. Assure that excess cable length feeds into cable passage where it will not be pinched between the radome base and the mounting surface.	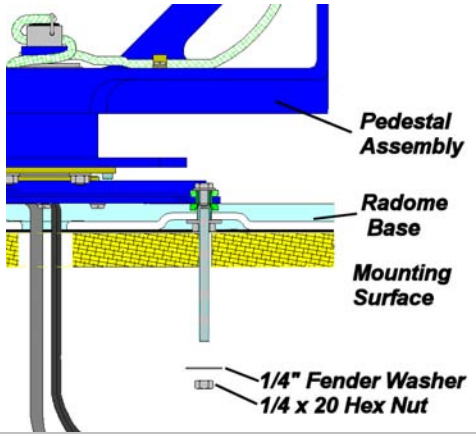
9 Install a ¼" fender washer and nut to each mounting stud from the underside of the mounting surface. *10* Apply Loctite 241 (supplied) to the threads of the mounting stud up near the mounting surface and tighten each of the 4 nuts to 24 in-lb (21 kg-cm) torque [finger tight, then about ¼ turn tighter] with a wrench. DO NOT OVER TIGHTEN. *11* If desired, the remaining length of threaded rod that extends below the nut may be cut off.	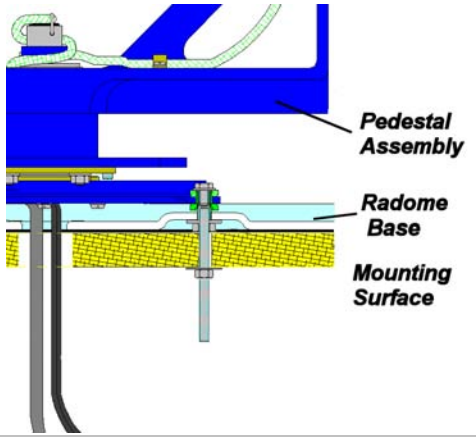

12 Remove (cut) the Tiewraps that were used to immobilize the antenna pedestal assembly for shipping. Several are used for the elevation axis, one through a p-clamp in the dish clip and one around the azimuth yoke. The Azimuth axis has one large tie around the bottom of the azimuth yoke and under the corner of the pedestal base plate. And one tie for the Polarization axis is through one hole in the feed assembly to the diagonal brace of the azimuth yoke. Assure that the antenna pedestal rotates freely in azimuth and elevation ***before*** energizing the antenna.	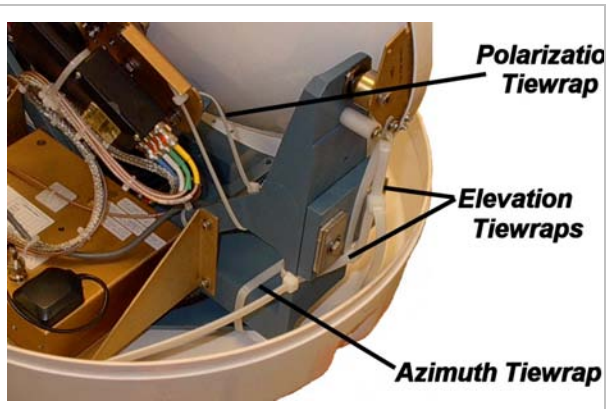
13 Install the radome top. Assure that all four of the mounting nuts are tightened to fully mate the lip edges of the radome top and base. Do not exceed 24 in-lb (21 kg-cm) torque [or finger tight, then about ¼ turn tighter] when tightening nuts. Install the provided white screw covers.	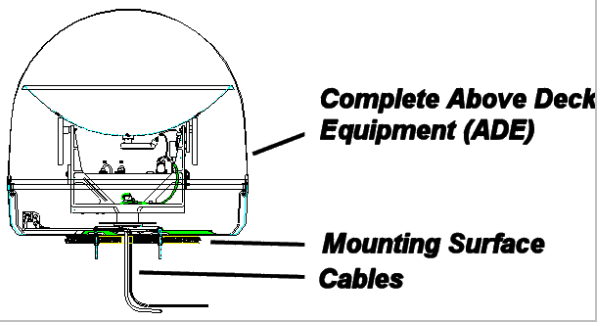

4.2.4. Other system cable connections

1 Connect the 8-pin screw terminal connector on the control cable to J2 on the back of the antenna control panel. Leave sufficient length on the cable connections to the antenna control panel to be able to remove it for testing or replacement. Excess control cable length below decks may be cut off and re-terminated according to the detail on the System Block Diagram, if necessary. **NOTE: be sure to open the screw clamps on the orange connector sufficiently to allow the wire to properly enter the connector when re-terminating the connection.**

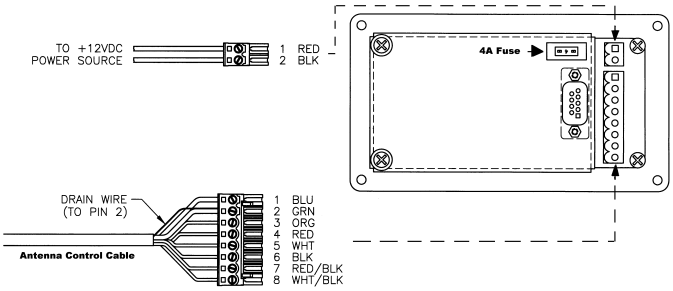

Figure 4-2 Antenna control panel connections

2 Connect the 2-pin screw terminal connector (previously wired to 12VDC power) to J1 on the antenna control panel .

3 Mount the antenna control panel using the provided self tapping screws to secure it in desired panel location.

4 Connect the antenna coaxes to the appropriate “LNB inputs” on the matrix switch. Connect each of the receiver coaxes to the receiver output connectors on the matrix switch. Connect each of the receiver coaxes to its respective satellite receiver “SATELLITE IN” connector.

BLUE coax - Low Band Vertical

GREEN coax - High Band Vertical or RHCP

WHITE coax - Low Band Horizontal

RED coax - High Band Horizontal or LHCP

5 Connect a TV monitor to each of the satellite receivers using Audio/Video, RF (TV OUT) or SCART connections. Refer to the instructions in the receiver manual for details.

6 Mount each of the satellite receivers, and its television monitor, as desired.

4.3. System Setup

Refer to the next section of this manual to setup your system.

This Page Intentionally Left Blank

5. Setup

5.1. System Checkout

1 Press the ON key on the antenna control panel. Both LED's (TRACKING and UNWRAP) should illuminate for 5 seconds verifying the DC power and LED cable connections between the antenna control panel and the antenna pedestal assembly.

2 Turn power ON to the satellite receiver and the TV monitor. The television may now be displaying "searching for satellite signal" verifying proper video connections between the receiver and the monitor.

5.2. Initial Setup

Initial setup is accomplished by the installer or operator using SETUP Mode to configure the system parameters (also refer to the SETUP Mode flowcharts on the following pages). Optionally the computer interface may be used to setup the system (refer to Appendix A).

Press and hold **SAVE** + ▼ for 6 seconds to access SETUP Mode. "Setup Mode" will be displayed on the first line of the display while the panel is in SETUP Mode.

Use the ▼ & ▲ arrow keys to scroll down & up through the Setup parameters listed below.

NOTE: *You will save individual set-up parameter settings as you modify them in the procedure below (quick presses of the SAVE key). These will only save the settings until POWER is cycled to the antenna.*

When you are finished making all of your desired changes, you ***MUST press and hold the SAVE key for six seconds,*** "Settings Saved" will be displayed. Saving writes all of the parameters, including the ones you have changed, to memory in the PCU so they will be available after POWER has been cycled to the antenna.

5.2.1. Adjusting Panel Brightness

1 Press the NEXT key to SELECT this parameter for adjustment.

2 Once selected, press ▲ & ▼ arrow keys to adjust the backlighting illumination of the display to desired level. Each keypress steps the value 8 counts.

3 Then press the SAVE key to save the adjusted setting.

4 Press the ▼ arrow key to go to the next parameter.

5.2.2. Setting Auto Threshold for Proper Tracking

Auto Threshold needs to be set to about 1/3rd of the difference in AGC between noise floor (OFF satellite) signal level and peak (ON satellite) signal level. The most common values used are 151for the 18, 161 for the 24 and 171 for the 30.

1. Press the **NEXT** key to SELECT this parameter for adjustment.
2. Once selected, press ▲ & ▼ arrow keys to increment/decrement the indicated digit to the desired value.
3. Press **NEXT** to move the adjustment cursor to the next character to be edited. Press ▲ & ▼ arrow keys to increment/decrement the indicated character to the desired value.
4. Repeat the previous step until all desired character positions have been edited.
5. Then press the SAVE key once to save this setting.
6. Press the ▼ arrow key to go to the next parameter.

5.2.3. SAT1 - First Satellite Parameters

Access all of the SAT1 individual parameters via a sub menu. Choices are:

5.2.3.1.PRESET

This choice presets all of the other sub-menu parameters to factory defaults for the satellite you choose to set this SAT to.

1. Press the NEXT key to SELECT this parameter for adjustment.
2. Once selected, press ▲ & ▼ arrow keys to scroll through a list of choices which this SAT can be preset to. This list may change in future software revisions. The current choices are:

Empty	Blanks/zeros all parameters for this satellite, so switching satellites (NEXT) will skip over the satellites you don't want (*if you only use ONE satellite, you should preset all of the other SAT selections to be empty/blank*).
SkMx58	Sky Mexico @ 58W
Dsh 65	Dish Network @ 65W
DTV 72	DirecTV @ 72W
ExpV82	Bell ExpressVu @ 82W
ExpV91	Bell ExpressVu @ 91W
GLA 95	DirecTV Latin America @ 95W
DTV101	DirecTV @ 101W
Dsh110	Dish Network @ 110W
Dsh119	Dish Network @ 119W
Dsh148	Dish Network @ 148W
HtBd13	Hot Bird @ 13E
Astr19	Astra @ 19E
Astr28	Astra @ 28E

3. When the desired choice is displayed, press the SAVE key to save the parameters for this SAT. This saves the ***DEFAULT*** Satellite Name, Satellite Longitude, Frequency, Alt Frequency, Baud rate, FEC rate, Network ID and Polarization Trim of this SAT.
4. If you want to edit any of the ***default*** values that are loaded with preset, press the ▼ arrow key to go to the next sub-menu parameter.

5 If you do not want to edit any other sub-menu parameters, press SAVE again to exit the sub-menu and return to the SAT main menu display. From there you can press the ▼ arrow key to go to next SAT numeric menu choice or to the Factory Settings menu choice.

5.2.3.2.NAME

Enter or edit the 6 character ***Name*** you want to use for this saved satellite.

6 Press the NEXT key to SELECT this sub-menu parameter for adjustment.

7 A cursor will appear under the leftmost character. Press ▲ & ▼ arrow keys to increment/decrement this character.

8 Press the NEXT key to move the cursor to the next character to the right. Press ▲ & ▼ arrow keys to increment/decrement this character.

9 Continue editing characters (6 max) until all desired characters have been set to create the NAME you want to use for this satellite selection. Press the SAVE key to save the NAME parameter for this SAT.

10 If you want to edit any of the other ***default*** values that are loaded with preset, press the ▼ arrow key to go to the next sub-menu parameter.

11 If you do not want to edit any other sub-menu parameters, press SAVE again to exit the sub-menu and return to the SAT main menu display. From there you can press the ▼ arrow key to go to next SAT numeric menu choice or to the Factory Settings menu choice.

5.2.3.3.LON

Enter or edit the ***Longitude*** position of this satellite. Range of acceptable values are 0-180, East or West (E or W).

1 Press the NEXT key to SELECT this sub-menu parameter for adjustment.

2 A cursor will appear under the East/West hemisphere character. Press ▲ & ▼ arrow keys to set this character to the desired hemisphere (E/W).

3 Press the NEXT key to move the cursor to the number digit to the right. Press ▲ & ▼ arrow keys to increment/decrement this digit.

4 Continue editing until all 3 digits have been set to the Longitude (0-180) position of this satellite selection. Press the SAVE key to save the LON parameter for this SAT.

5 If you want to edit any of the other ***default*** values that are loaded with preset, press the ▼ arrow key to go to the next sub-menu parameter.

6 If you do not want to edit any other sub-menu parameters, press SAVE again to exit the sub-menu and return to the SAT main menu display. From there you can press the ▼ arrow key to go to next SAT numeric menu choice or to the Factory Settings menu choice.

5.2.3.4.FREQ

Enter or edit the best ***Frequency*** (in MHz) for the receiver to use to track this satellite. Range of acceptable frequency input is 950-2150 MHz.

1 Press the NEXT key to SELECT this sub-menu parameter for adjustment.

2 A cursor will appear under the rightmost digit. Press ▲ & ▼ arrow keys to increment/decrement this digit.

3 Press the NEXT key to move the cursor to the digit to the left. Press ▲ & ▼ arrow keys to increment/decrement this digit.

4 Continue editing until all 4 digits have been set to the desired tracking Frequency for this satellite selection. Press the SAVE key to save the FREQ parameter for this SAT.

5 If you want to edit any of the other ***default*** values that are loaded with preset, press the ▼ arrow key to go to the next sub-menu parameter.

6 If you do not want to edit any other sub-menu parameters, press SAVE again to exit the sub-menu and return to the SAT main menu display. From there you can press the ▼ arrow key to go to next SAT numeric menu choice or to the Factory Settings menu choice.

5.2.3.5.ALTFREQ

For future use. Set to 0000.

5.2.3.6.BAUD

Enter or edit the best ***Baud rate*** for the receiver to use for this satellite. Range of acceptable input is 5000-30000 symbols per second.

1 Press the NEXT key to SELECT this sub-menu parameter for adjustment.

2 A cursor will appear under the rightmost digit. Press ▲ & ▼ arrow keys to increment/decrement this digit.

3 Press the NEXT key to move the cursor to the digit to the left. Press ▲ & ▼ arrow keys to increment/decrement this digit.

4 Continue editing until all 5 digits have been set to the desired Baud rate for this satellite selection. Press the SAVE key to save the BAUD parameter for this SAT.

5 If you want to edit any of the other ***default*** values that are loaded with preset, press the ▼ arrow key to go to the next sub-menu parameter.

6 If you do not want to edit any other sub-menu parameters, press SAVE again to exit the sub-menu and return to the SAT main menu display. From there you can press the ▼ arrow key to go to next SAT numeric menu choice or to the Factory Settings menu choice.

5.2.3.7.FEC

Enter or edit the best ***Forward Error Correction rate*** for the receiver to use for this satellite.

This choice presets all of the other sub-menu parameters to factory defaults for the satellite you choose to set this SAT to.

1 Press the NEXT key to SELECT this parameter for adjustment.

2 Once selected, press ▲ & ▼ arrow keys to scroll through a list of choices which this SAT can be preset to. This list may change in future software revisions. The current choices are:

AUTO	Automatically scans through all the standard DVB & DSS FEC rates.
1/2	
2/3	
3/4	
5/6	
6/7	
7/8	
SCPC	SCPC mode may be selected for tracking narrow band signals. This is not normally needed for tracking satellite TV signals.

AUTO*	Automatically scans through all the available forced ***** (star'ed) FEC rates. If the satellite does not generate an NID but does have a unique combination of FREQ, BAUD and FEC lock, select the appropriate *FEC** choice from this list. The system will then generate its own unique forced NID to represent the desired satellite. You will need to enter this pseudo NID in the *NID* setting below.
1/2*	
2/3*	
3/4*	
5/6*	
6/7*	
7/8*	
NBIF	SCPC mode may be selected for tracking narrow band signals. This is not normally needed for tracking satellite TV signals.

3 When the desired choice is displayed, press the SAVE key to save the parameters for this SAT. This saves the FEC rate to use for this SAT.

4 If you want to edit any of the ***default*** values that are loaded with preset, press the ▼ arrow key to go to the next sub-menu parameter.

5 If you do not want to edit any other sub-menu parameters, press SAVE again to exit the sub-menu and return to the SAT main menu display. From there you can press the ▼ arrow key to go to next SAT numeric menu choice or to the Factory Settings menu choice.

5.2.3.8.NID

Enter or edit the best ***Network ID*** 4 digit HEX value for the receiver to use to Identify & track this satellite.

1 Press the NEXT key to SELECT this sub-menu parameter for adjustment.

2 A cursor will appear under the rightmost digit. Press ▲ & ▼ arrow keys to increment/decrement this digit (only valid HEX values 0-F will be displayed).

3 Press the NEXT key to move the cursor to the digit to the left. Press ▲ & ▼ arrow keys to increment/decrement this digit.

4 Continue editing until all 4 digits have been set to the desired NID for this satellite selection. Press the SAVE key to save the NID parameter for this SAT.

5 If you want to edit any of the other ***default*** values that are loaded with preset, press the ▼ arrow key to go to the next sub-menu parameter.

6 If you do not want to edit any other sub-menu parameters, press SAVE again to exit the sub-menu and return to the SAT main menu display. From there you can press the ▼ arrow key to go to next SAT numeric menu choice or to the Factory Settings menu choice.

5.2.3.9.POL TRIM

Individual ***Polarization Trim*** offset adjustment to optimize the Auto-Polarization on this satellite. Some satellite beams aimed at certain geographic areas are purposely skewed in polarization. During initial setup of this satellite selection, you will have to trim/offset auto-polarization by the amount of skew of the satellite beam. Once this adjustment has been set, and saved, auto-polarization will keep the polarization optimized during ship motion and geographic travel. Range of acceptable input is +/- 40 degrees.

If you do ***NOT*** know what amount of offset is required for this satellite refer to the procedure in paragraph 5.3.

If you know what amount of +/- polarization offset is needed for this SAT, continue with the steps below:

1 Press the NEXT key to SELECT this sub-menu parameter for adjustment.

2 A cursor will appear under the rightmost digit. Press ▲ arrow key to increment the Pol Trim plus one degree. Press ▼ arrow key to decrement the Pol Trim minus one degree.

3 Press the SAVE key to save the POL TRIM parameter for this SAT.

4 If you want to edit any of the other ***default*** values that are loaded with preset, press the ▼ arrow key to go to the next sub-menu parameter.

5 If you do not want to edit any other sub-menu parameters, press SAVE again to exit the sub-menu and return to the SAT main menu display. From there you can press the ▼ arrow key to go to next SAT numeric menu choice or to the Factory Settings menu choice.

5.2.4. SAT2 - Second Satellite Parameters

Access all of the SAT2 individual parameters via a sub menu. If a second SAVED satellite if not needed, preset SAT2 to empty/blank so NEXT will skip over this selection when you are switching satellites.

All of the SAT2 parameters are set exactly the same way that the SAT1 parameters were set, but would be set to different choices. Refer to the parameter setting information in the SAT1 – First Satellite Parameters paragraphs to set PRESET, NAME, LON, FREQ, ALT FREQ, BAUD, FEC, NID and POL TRIM for a second satellite you wish to use periodically.

5.2.5. SAT3 - Third Satellite Parameters

Access all of the SAT3 individual parameters via a sub menu. If a second SAVED satellite if not needed, preset SAT3 to empty/blank so NEXT will skip over this selection when you are switching satellites.

All of the SAT3 parameters are set exactly the same way that the SAT1 parameters were set, but would be set to different choices. Refer to the parameter setting information in the SAT1 – First Satellite Parameters paragraphs to set PRESET, NAME, LON, FREQ, ALT FREQ, BAUD, FEC, NID and POL TRIM for a third satellite you wish to use periodically.

5.2.6. SAT4 - Fourth Satellite Parameters

Access all of the SAT4 individual parameters via a sub menu. If a second SAVED satellite if not needed, preset SAT4 to empty/blank so NEXT will skip over this selection when you are switching satellites.

All of the SAT4 parameters are set exactly the same way that the SAT1 parameters were set, but would be set to different choices. Refer to the parameter setting information in the SAT1 – First Satellite Parameters paragraphs to set PRESET, NAME, LON, FREQ, ALT FREQ, BAUD, FEC, NID and POL TRIM for a fourth satellite you wish to use periodically.

5.2.7. SAT5 - Fifth Satellite Parameters

Access all of the SAT5 individual parameters via a sub menu. If a second SAVED satellite if not needed, preset SAT5 to empty/blank so NEXT will skip over this selection when you are switching satellites.

All of the SAT5 parameters are set exactly the same way that the SAT1 parameters were set, but would be set to different choices. Refer to the parameter setting information in the SAT1 – First Satellite Parameters paragraphs to set PRESET, NAME, LON, FREQ, ALT FREQ, BAUD, FEC, NID and POL TRIM for a fifth satellite you wish to use periodically.

5.2.8. SAT6 - Sixth Satellite Parameters

Access all of the SAT6 individual parameters via a sub menu. If a second SAVED satellite if not needed, preset SAT6 to empty/blank so NEXT will skip over this selection when you are switching satellites.

All of the SAT6 parameters are set exactly the same way that the SAT1 parameters were set, but would be set to different choices. Refer to the parameter setting information in the SAT1 – First Satellite Parameters paragraphs to set PRESET, NAME, LON, FREQ, ALT FREQ, BAUD, FEC, NID and POL TRIM for a sixth satellite you wish to use periodically.

5.2.9. FACTORY SETTINGS

Accessing the Factory Settings parameters should ***ONLY*** be done by a qualified technician from an authorized Sea Tel dealer. The Model Serial Number can be found on the blue and silver label below the reflector, on the blue frame of the pedestal. The parameters are:

5.2.9.1.MODEL COASTAL ##

This parameter sets all of the internal drive, scale factor and limits for the motors, gear ratios and sensors FOR THIS MODEL ANTENNA.

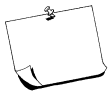	**NOTE: The MODEL parameter setting is saved in the PCU, therefore, MUST be set whenever the PCU is changed.**
	**WARNING:** ***Improper setting of this parameter WILL cause the antenna to malfunction.***

1. Press the NEXT key to SELECT this sub-menu parameter for adjustment.
2. Once selected, press ▲ & ▼ arrow keys to scroll through a list of model number choices. This list may change in future software revisions. The current choices are:

   18 18 inch diameter reflector

   24 24 inch diameter reflector

   30 30 inch diameter reflector
3. When the correct model value is displayed, press the SAVE key to save the Model Number parameters. This saves the drive, scale factors and limits for this antenna. *If this parameter is **NOT set correctly**, the **antenna WILL malfunction**.*
4. If you want to edit any of the Serial Number parameter, press the ▼ arrow key.
5. If you do not want to edit the Serial Number, press SAVE again to exit the sub-menu and return to the SAT main menu display.

5.2.9.2.Serial Number

This parameter sets Serial Number of the Antenna Pedestal into the PCU memory. The serial number starts with 98 followed by 6 digits that are editable. This parameter allows the Serial Number of the Antenna to be displayed on the Display Antenna Control Panel.

	NOTE: The Serial Number parameter setting is saved in the PCU, therefore, MUST be set whenever the PCU is changed.

After this parameter has been set correctly, it must be SAVED in the PCU.

1. Press the NEXT key to SELECT this sub-menu parameter for adjustment.
2. A cursor will appear under the rightmost digit. Press ▲ & ▼ arrow keys to increment/decrement this digit.
3. Press the NEXT key to move the cursor to the digit to the left. Press ▲ & ▼ arrow keys to increment/decrement this digit.
4. Continue editing until all 6 digits have been set to the correct Serial Number of the antenna pedestal that this PCU is mounted on. Press the SAVE key to save the Serial Number parameter.
5. Press SAVE again to exit the sub-menu and return to the FACTORY SETTINGS main menu display. From there you can press the ▲ arrow key to go UP through the SAT numeric menu choices.

5.3. Linear Polarization Adjustment

Polarization is adjusted for a desired satellite when the system is initially installed. Subsequently it needs only to be adjusted when changing from one satellite to another, or when the boat has traveled a significant geographic distance. It should NOT need to be re-adjusted if the boat stays in the same location and is operating on the same satellite.

Polarization of your Series 98SL antenna must be accomplished manually. Each time you need to adjust the polarization you will have to take the radome top off, loosen the LNB mounting set screws and rotate the LNB. When you have optimized the polarity, tighten the set screws and put the radome top back on.

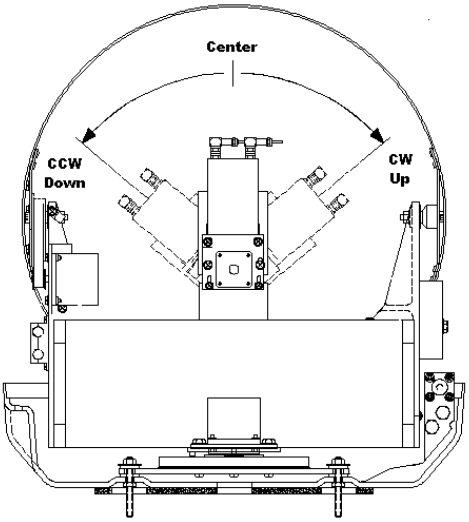

Figure 5-1 LNB rotation during polarization adjustment

The adjacent figure shows the rotation of the LNB assembly mounted on the back side of the dish as it would be seen if observed while polarization is being adjusted. As the polarization is mis-adjusted, the signal level will degrade. If it is mis-adjusted far enough, the signal will be completely lost.

Note: The polarization entry from the Antenna Control Panel will ***NOT*** electrically rotate your LNB. Each momentary keypress of the ▲ (POL UP), or ▼ (POL DOWN), will increment/decrement the ***displayed value***

but will ***NOT*** rotate the LNB.

The antenna reports that it is tracking a good signal by displaying a steady (ON) TRACKING LED. If you determine that the satellite signal is not the desired satellite, press the NEXT key to search for the NEXT satellite signal. Continue repeating this procedure until the correct satellite is found. Once the correct satellite has been found, allow the antenna to track for 4-6 minutes to update the satellite position information.

5.3.1. Optimizing the polarization while on the desired satellite

This adjustment should be done while the boat is at the pier and antenna is tracking the desired satellite. When the boat is travelling to a different geographic area the polarization may need to be re-optimized if performance appears to be degrading.

Select the "Signal Strength" display of the satellite receiver (refer to the satellite receiver manual). While monitoring the receivers' signal strength, adjust polarization up or down in one (or two) degree increments, then observe the receivers' signal strength for 10-15 seconds to evaluate the change. If an improvement is noted, continue small adjustments in the same direction until the highest signal strength is obtained. If the adjustment causes a decrease, adjust polarization in the opposite direction to increase the signal strength. When the polarization of the antenna is optimum, tighten the set screws and re-install the radome top.

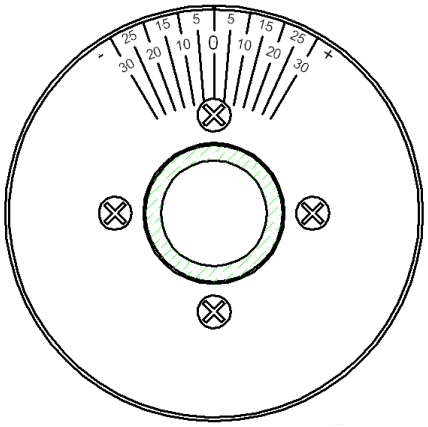

Figure 5-2 LNB rotation during polarization adjustment

5.3.2. Setting polarization for a different satellite (changing satellites)

When changing from one satellite to another you may need to adjust the polarization of the LNB to be able to acquire the satellite you want to switch to. This will only be required if the difference in polarization angle of the two satellites is greater than ten degrees.

1 Assure that you have optimized the polarization for the satellite you are presently on using the procedure in 2.4.1.

2 Compare the longitude of the satellite you are presently on to the longitude of the satellite you will be switching to. Note the amount & direction of the difference in longitude position of the two satellites. Adjust the polarization 10 degrees for each 10 degrees of longitude difference between the two satellites. If the satellite you are switching to is further East from the present satellite you will need to adjust polarization DOWN the appropriate number of degrees. If the satellite you are switching to is West from the present satellite you will need to adjust polarization UP the appropriate number of degrees. Examples:

Presently optimized on Astra 1 at 19.2E and want to switch to Hotbird at 13.0E. Difference is less than 10 degrees, so no adjustment is necessary before searching for the next satellite (step 4).

Presently optimized on Astra 1 at 19.2E and want to switch to Astra 2 at 28.2E. Difference is about 10 degrees East. You need to rotate the LNB (POL DOWN) 10 degrees and then search for the next satellite (steps 3 & 4).

Presently optimized on Astra 1 at 19.2E and want to switch to Thor 1 at 0.8W. Difference is about 20 degrees West. You need to rotate the LNB (POL UP) 20 degrees and then search for the next satellite (steps 3 & 4).

6 Adjust polarization UP/DOWN the amount determined in step 2.

7 Press NEXT to search for the next satellite. If the next satellite found is not the desired satellite, press NEXT to continue searching. Repeat searching until the desired satellite is found. Allow the antenna to track the satellite for about two minutes.

8 Optimize polarization while on the new satellite using the procedure in 2.3.1.

If you will be changing satellites periodically to view different programming, note the polarization for each of the satellites you will be using. It may also be helpful to record the elevation of the satellites you will be using. Setting the elevation and polarization before searching for the next satellite will help shorten the search process. Elevation of the satellite(s) may be entered & saved using SETUP Mode.

5.3.3. Setting polarization when you have changed geographic areas

If the boat is travelling a great distance it is recommended that you optimize the polarization using the procedure in 2.4.1 after each 10 degree latitude or longitude change. If you have changed latitude and longitude by a significant geographic distance, while the antenna has been turned off, it may be necessary to adjust the polarization to find the desired satellite.

If you are able to find (and identify) a satellite, optimize the polarization and follow the procedure in section 2.4.2 to change from the satellite you are presently on to the one you desire to be using. If you are not able to find any satellites, adjust polarization up or down 10 degrees and press NEXT to search for a (next) satellite signal. Continue adjusting polarization and searching, until a satellite signal is found and you can follow the procedure in section 2.4.2 to change from the satellite you are presently on to the one you desire to be using.

If after all polarization settings have been tried and no satellite signal can be found, refer to the Troubleshooting section of this manual.

5.4. Saving the SETUP Parameters

When you have completed setting the desired parameters above, Press and HOLD **SAVE** for 6 seconds to save the changes you have made to the settings and exit SETUP Mode. “Settings Saved” will be displayed.

If you do NOT want to save the changes to NVRAM, Press **SAVE** + ▲ to exit SETUP Mode ***without*** permanently saving any parameter changes.

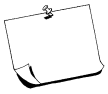

NOTE: *You will save individual set-up parameter settings as you modify them in the procedure below (quick presses of the SAVE key). These will only save the settings until POWER is cycled to the antenna.*

When you are finished making all of your desired changes, you ***MUST press and hold the SAVE key for six seconds*** to write the changes you have made to memory (“Settings Saved” will be displayed) in the PCU, so they will be available after POWER has been cycled to the antenna.

5.5. Operational System Checks

Check-out the antenna and other components of the system on the selected satellite.

1 Assure that your TV(s) and satellite receiver(s) are set to view the Setup/Antenna/Signal Meter menu of the Satellite Receiver on the selected satellite (SAT 1-6).

2 Signal level will be visible on the receiver monitor and the AGC value displayed on the Antenna Control Panel.

3 Allow the system to track this satellite for 5-6 minutes. Check to assure that any other installed satellite receivers are also displaying signal level and the televisions they are connected to are operating normally.

4 Press the NEXT key to switch to the next (numerically) viewable satellite from you current position. The system should automatically target and search for the selected satellite. Observe the Tracking and Unwrap LED's and the panel displays. The Unwrap LED will flash while the antenna is searching and search messages will be displayed. The Tracking LED will come on steady when a valid satellite signal is acquired. The Unwrap LED will continue to flash for 8 seconds while the antenna verifies the satellite signal.

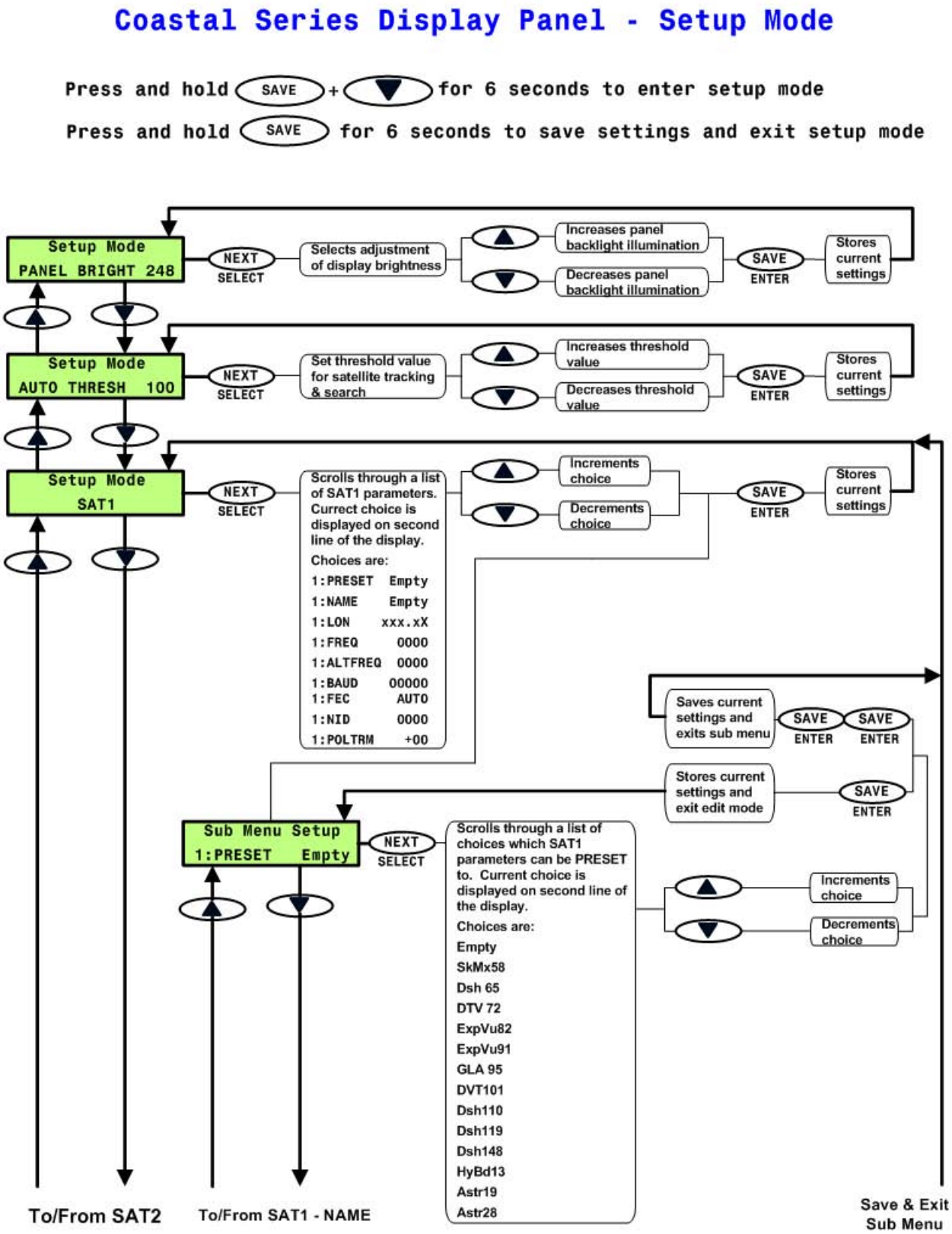

Figure 5-3 Display Antenna Control Panel – Setup Mode, page 1

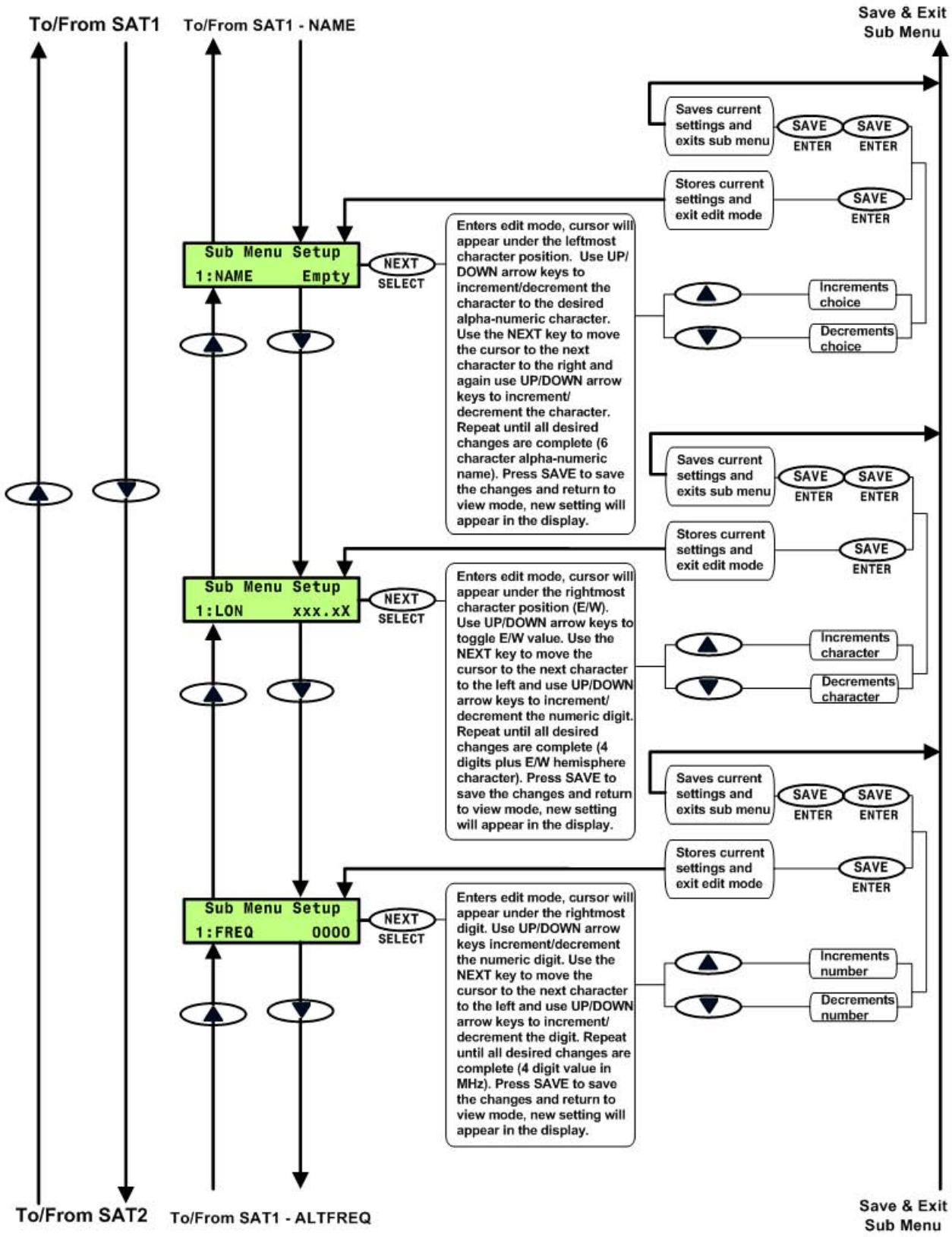

Figure 5-4 Display Antenna Control Panel – Setup Mode, page 2

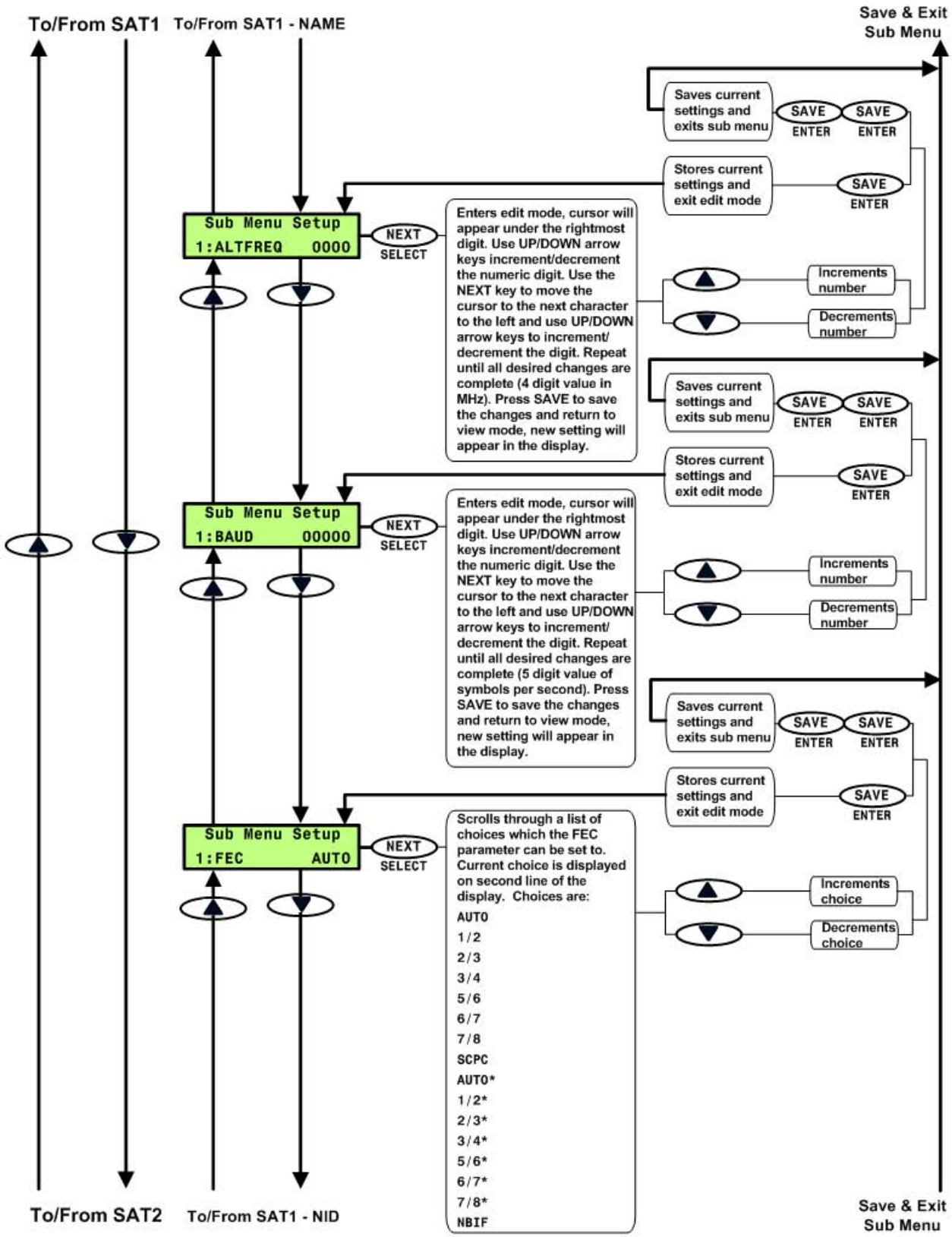

Figure 5-5 Display Antenna Control Panel – Setup Mode, page 3

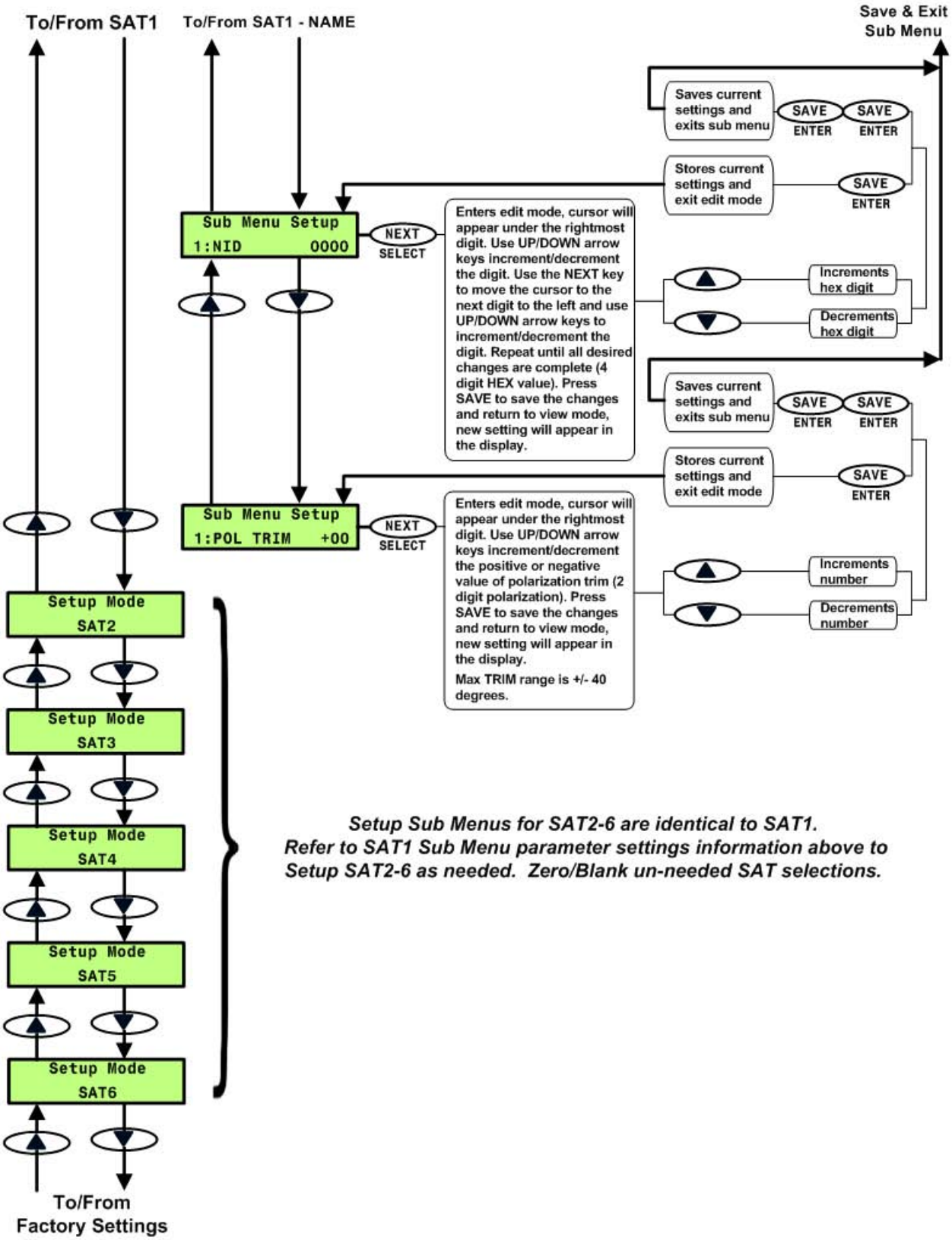

Figure 5-6 Display Antenna Control Panel – Setup Mode, page 4

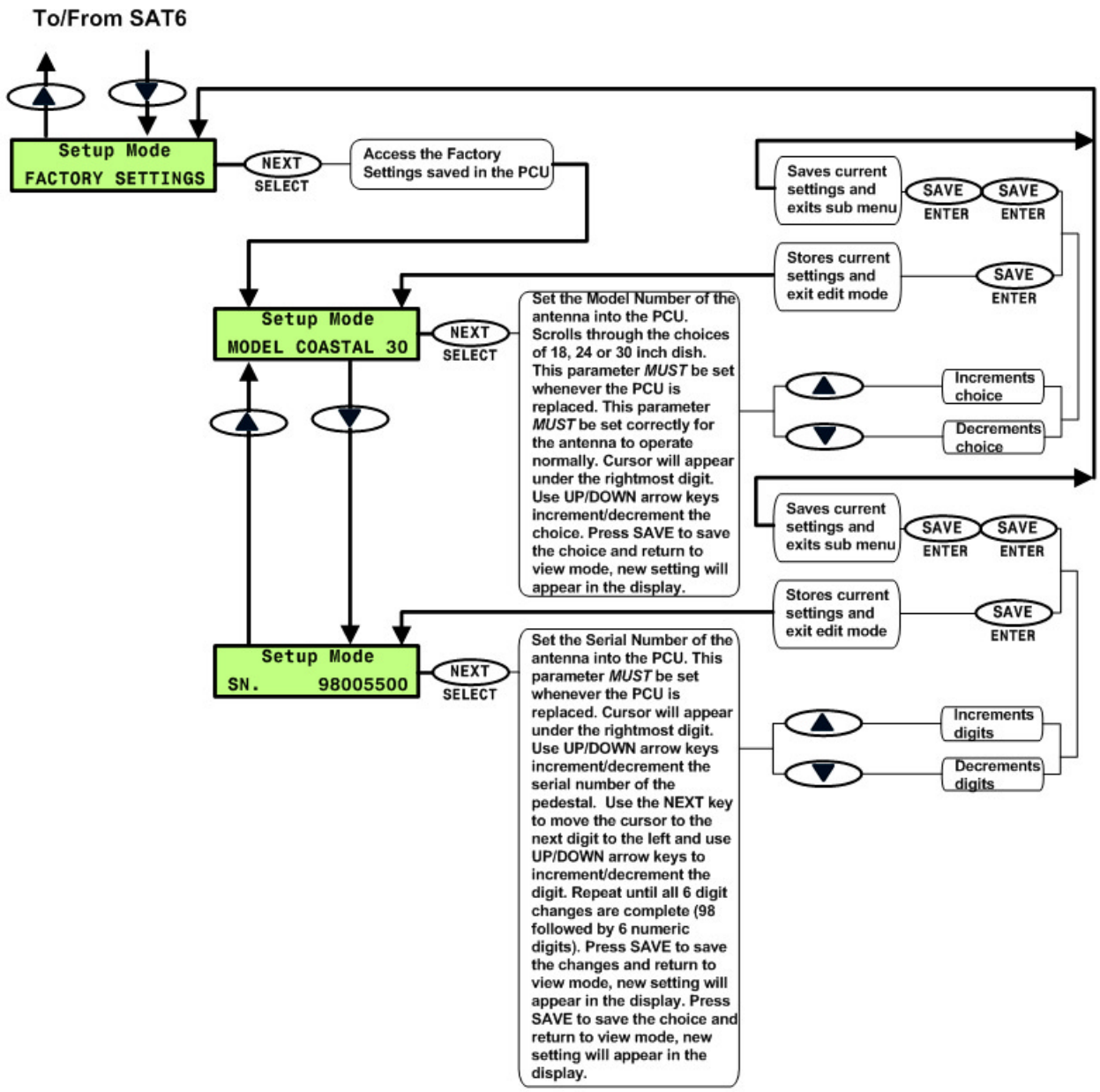

Figure 5-7 Display Antenna Control Panel – Setup Mode, page 5

6. Maintenance

6.1. Warranty Information

Sea Tel Inc. supports its Coastal Series systems with a warranty program unsurpassed in the industry. These systems are backed by a ***TWO YEAR*** full warranty on parts and a ***ONE YEAR*** warranty on labor.

What's Covered by the Limited Warranty?

The Sea Tel Coastal Series Limited Warranty is applicable for parts and labor coverage to the complete antenna system, including all above-decks equipment (radome, pedestal, antenna, motors, electronics, wiring, etc.) and the antenna control panel. It does not include television sets, DBS/DTH receivers, multi-switches or other distribution equipment, whether or not supplied by Sea Tel. Televisions, DBS/DTH receivers and accessories are covered by the applicable warranties of the respective manufacturers.

Factory refurbished components used to replace systems parts under this warranty are covered by this same warranty as the original equipment for the balance of the original warranty term, or ninety (90) days from the date of replacement, whichever occurs last. Original Installation of the Coastal Series system must be accomplished by or under the supervision of an authorized Sea Tel dealer for the Sea Tel Limited Warranty to be valid and in force.

Please refer to the complete warranty information included with your system.

6.2. Who to contact for repairs

Should technical assistance be required to repair your system, the first contact should be to the agent/dealer you purchased the equipment from. Please record their contact information below for future reference. Repairs to your Coastal Series system must be accomplished by or under the supervision of an authorized Sea Tel dealer for the Sea Tel Limited Warranty to be valid and in force.

Agent/Dealer: _____

Address: _____

_____

Phone: _____ Fax: _____

Sea Tel can recommend local dealers that can provide service in your local area that can be contacted for assistance. You can contact us directly at either of the locations below;

Sea Tel, Inc.
4030 Nelson Avenue
Concord, CA 94520 USA
Tel: 925-798-7979
Fax: 925-798-7986
Toll Free: 1-888-798-7979
Email: seatel@seatel.com
http://www.seatel.com

Sea Tel Europe
Unit 1 Orion Industrial Centre
Wide Lane Swaythling
Southampton, UK S018 2HJ
Tel: +44 (0)23 80 671155
Fax: +44 (0)23 80 671166
e-mail: europe@seatel.com

6.3. Preventive Maintenance

As needed - Clean the outside surface of the radome with warm soapy water to remove dust, grime and salt residue.

There is no other preventive maintenance required

6.4. Fault Isolation/Trouble-shooting

The following table is provided to help isolate problems in the Series Antenna system.

Symptom	*Possible Fault*
Antenna tracking but receiver not providing desired programming	1. Incorrect satellite. Press NEXT to search for desired satellite 2. Receiver fault. Refer to receiver manual for operation and testing.
Antenna tracking, receiver only gets some desired channels	1. May be in weak area of footprint 2. Polarization may not be optimized (refer to section 2.3.1) 3. Receiver may not be generating correct voltage or tone output. Refer to receiver manual for operation and testing. 4. Matrix switch may not be passing voltage or tone output from the receiver. Contact your dealer/agent. 5. LNB assembly failure. Contact your dealer/agent.
Intermittent freeze-framing of picture	1. Check for blockage 2. May be in weak area of footprint 3. Polarization may not be optimized (refer to section 2.3.1) 4. Receiver may not be generating correct voltage or tone output. Refer to receiver manual for operation and testing. 5. Is matrix switch buzzing or clicking. Contact your dealer/agent. 6. Check all coax cables for poor connection 7. Possible receiver failure. Contact your dealer/agent. 8. Possible antenna failure. Contact your dealer/agent.
Antenna does not come on when the ON key is pressed	1. Check +12 VDC input to antenna control panel. 2. Verify that all connections on the rear of the antenna control panel are properly seated. 3. Check the 4A fuse in the rear panel of the antenna control panel 4. Call dealer/agent for further assistance

Antenna doesn't track any satellites (constantly searching)	1. Assure that at least one receiver is ON 2. Check for blockage 3. Assure correct starting elevation 4. May be out of satellite footprint 5. Check all coax cables for poor connection 6. Call dealer/agent for further assistance
Antenna in constant UNWRAP	1. Cycle antenna power OFF/ON to reinitialize the antenna. 2. Call dealer/agent for further assistance
Antenna tracks well at the pier, but loses the satellite when underway	1. Polarization may not be optimized (refer to section 2.3.1) 2. Call dealer/agent for further assistance
Antenna does not stay on satellite at pier, or underway	1. Check all coax cables for poor connection 2. Polarization may not be optimized (refer to section 2.3.1) 3. Call dealer/agent for further assistance

6.5. Pedestal & PCU Troubleshooting Using Built-In Test (BIT)

The following table is provided to help isolate problems using the Built-In Test (BIT) function in the Coastal Series Antenna system.

	NOTE: ***Do NOT run these BIT tests while underway or when the pedestal base is more than 5 degrees off level.***
	NOTE: The MODEL parameter setting is saved in the PCU, therefore, MUST be set whenever the PCU is changed.
	WARNING: ***Improper setting of the MODEL parameter WILL cause the antenna to malfunction*****.**
	NOTE: The Serial Number parameter setting is saved in the PCU, therefore, MUST be set whenever the PCU is changed.

To access the BIT function, turn the antenna system Power OFF at the Display Antenna Control Panel (DACP). While you Press & Hold the NEXT key, press the POWER key.

After a few seconds, you will see "Built In Test" on the top line of the display and "Press Next to begin" on the second line. Press NEXT and the BIT tests will begin and run automatically until completed ("BIT Finished No Errors" will be displayed) or until a test fails. The BIT tests are:

6.5.1. ADC Test

This test checks for basic communication with the Analog-to-Digital Converter on the PCU main board. A bad A/D could make all other tests fail.

"Testing ADC" will be displayed as the test runs. An Error code 1.01-1.08 will be displayed if one of these

tests fails. If any test fails, replace the PCU and re-run BIT tests.

6.5.2. DAC Test

This test checks the basic integrity of the Digital-to-Analog Converter on the PCU main board by looping back one of it's outputs to the A/D.

"Testing DAC" will be displayed as the test runs. An Error code 2.01-2.21 will be displayed if one of these tests fails. If any test fails, replace the PCU and re-run BIT tests.

6.5.3. AZ Motor Driver Test

This test checks the ability of the motor driver to drive current through the Azimuth motor. The current to the motor is controlled by a PWM circuit. The PWM current is repeatedly sampled and statistically analyzed during this test.

"Testing AZ MTR" will be displayed as the test runs. An Error code 3.01-3.17 will be displayed if one of these tests fails.

A failure indicates a failed motor, Motor Driver PCB or harness. Temporarily connect a spare motor to the PCU in place of the failed motor (or swap the AZ motor with the EL or POL motor connection at the PCU) to isolate the failure to the PCU or MOTOR. When re-running the same test:

If the test passes, replace the failed motor (if you swapped motors the other motor test will not fail) and re-run the BIT tests.

If the test fails, replace the PCU and re-run the BIT tests.

6.5.4. EL Motor Driver Test

This test checks the ability of the motor driver to drive current through the Elevation motor. The current to the motor is controlled by a PWM circuit. The PWM current is repeatedly sampled and statistically analyzed during this test.

"Testing EL MTR" will be displayed as the test runs. An Error code 4.01-4.17 will be displayed if one of these tests fails.

A failure indicates a failed motor, Motor Driver PCB or harness. Temporarily connect a spare motor to the PCU in place of the failed motor (or swap the EL motor with the AZ or POL motor connection at the PCU) to isolate the failure to the PCU or MOTOR. When re-running the same test:

If the test passes, replace the failed motor (if you swapped motors the other motor test will not fail) and re-run the BIT tests.

If the test fails, replace the PCU and re-run the BIT tests.

6.5.5. POL Motor Driver Test

This test checks the ability of the motor driver to drive current through the Polarization motor. The current to the motor is controlled by a PWM circuit. The PWM current is repeatedly sampled and statistically analyzed during this test.

"Testing POL MTR" will be displayed as the test runs. An Error code 5.01-5.17 will be displayed if one of these tests fails.

A failure indicates a failed motor, Motor Driver PCB or harness. Temporarily connect a spare motor to the PCU in place of the failed motor (or swap the POL motor with the AZ or EL motor connection at the PCU) to isolate the failure to the PCU or MOTOR. When re-running the same test:

If the test passes, replace the failed motor (if you swapped motors the other motor test will not fail) and re-run the BIT tests.

If the test fails, replace the PCU and re-run the BIT tests.

6.5.6. Sensor Test

This test checks for null sensor offsets for a level, motionless system. The checks have a fairly wide pass/fail criteria, but can still fail if pedestal is in motion or out of level more than a few degrees.

“Test Sensor Bias” will be displayed as the test runs. An Error code 6.01-6.05 will be displayed if one of these tests fails. If any test fails, replace the PCU and re-run BIT tests.

6.5.7. AZ move/ Rate sensor test

This test commands moves the dish at various speeds in Azimuth and checks the results using the AZ rate sensor.

“Test AZ Sensor” will be displayed as the test runs. An Error code 7.01-7.05 will be displayed if one of these tests fails. An error indicates a motor drive rate or sensor failure. This could be due to:

- Mechanical binding of the pedestal or AZ Bearing. With Power OFF, visually inspect the antenna and radome (inside of base and top) for drag against the radome or binding/fouling of pedestal in the antenna cables or against the cable connector bracket. Rotate the antenna in Azimuth with your hand/finger to feel for any binding in azimuth rotation. Re-route cables and/or bend connector bracket to remove fouling with the pedestal. If the pedestal is dragging inside the radome itself or if the AZ Bearing has failed, the radome and/or pedestal will have to be replaced. If this check found a problem, and you have corrected it, re-run the BIT tests.
- AZ Belt dragging, or slipping. Inspect AZ Drive Belt for chaffing or wear (leaves black dust). Inspect AZ Drive Belt proper tension (belt should be taut when pinched in on both sides of the AZ Motor Drive Sprocket – it should NOT flex more than 1/16th inch on both sides when pinched). Re-align and tension the motor for correct belt path and tension. If this check found a problem, and you have corrected it, re-run the BIT tests.
- AZ Motor failure. Replace the AZ motor and re-run the BIT tests.
- AZ Drive or AZ Rate Sensor Failure. Replace the PCU and re-run the BIT tests.

6.5.8. Pol Pot/Motor move test

This test commands moves the feed assembly at various speeds in Polarization and checks the results using the POL potentiometer.

“Test POL Assy” will be displayed as the test runs. An Error code 8.01-8.07 will be displayed if one of these tests fails.

A failure indicates a failed motor, belt or potentiometer. This could be due to:

- Mechanical binding of the polarization assembly. With Power OFF, visually inspect the polarization assembly (including LNB and cables) for drag against the pedestal or dish. Rotate the polarization assembly with your finger to feel for any binding in rotation. Re-route cables to remove fouling with the pedestal. If binding is felt, remove motor belt and re-check binding. If the polarization assembly is still binding (indicating bearing failure), it must be replaced. If this check found a problem, and you have corrected it, re-run the BIT tests.
- POL Drive Belt or POL Pot Drive Belt dragging, or slipping. Inspect drive belts for chaffing or wear (leaves black dust). Inspect drive belts proper tension (belts should be semi-taut when pinched in on both sides of the Motor Drive Sprocket or Pot Drive Sprocket – the belts should NOT flex more than 1/16th inch on both sides when pinched). Re-align and tension the motor & pot for correct belt path and tension. If this check found a problem, and you have corrected it, re-run the BIT tests.
- Rotate the polarization assembly to center of it’s mechanical range (LNB near vertical) and observe while BIT test runs. If the POL Motor does NOT drive during the test. Replace the POL motor and re-run the BIT tests.
- POL Potentiometer (Pot) mounting out of position or failed. Rotate the polarization assembly to

center of it's mechanical range. Loosen pot mounting bracket to de-couple the belt and rotate the pot sprocket. If the sprocket is loose on the shaft of the pot, tighten the set screws. If the pot does not rotate, replace it. Check continuity of the pot from CW to CCW ends (steady resistance) and from Wiper to CW, or CCW, end (resistance varies with rotation) to verify proper operation. The pot is a three turn potentiometer, rotate the sprocket to find one end stop and then rotate it exactly 1 ½ turns away from that stop to the center of rotation. Hold the sprocket in place while re-coupling the belt, tension the belt as you tighten the pot mounting bracket. If this check found a problem, and you have corrected it, re-run the BIT tests.

- Check the harness for good continuity from point-to-point and that there are no shorts from wire-to-wire, or from wire-to-ground that are not supposed to be there. Repair any harness problems found and re-run the BIT tests.
- If there are NO problems with ANY of the other steps above, replace the PCU and re-run the BIT tests.

6.6. Replacing a Defective LNB

Follow the procedure below to install and align a replacement LNB. After the LNB is installed, the POL OFFSET parameter must be re-optimized.

1 Remove radome top. *2* You may need to rotate the antenna to gain access the back of the dish. *3* Note that the body of the current Circular LNB is vertical (straight up). If you have a Linear LNB installed it will be rotated, from vertical, some number of degrees. Note the linear polarization location so you can match the new LNB to this location.	
4 Loosen the Allen set screws on the existing LNB mounting collar (three set screws, 120 degrees apart) and extract it from the mounting collar. *5* Insert the new LNB (same style) into the mounting collar, assure it is seated all the way into the mounting collar tube, rotate the LNB as needed to align the center of the body of the circular LNB to a vertical position (straight up) and tighten the set screws. If you are replacing a linear LNB rotate it to the same angle as the failed LNB was in and tighten the set screws.	
6 Transfer the coax cables from the old LNB to the new LNB, assure that the correct color coax is attached to the correct port on the LNB. *7* Re-install the radome top and tighten radome hardware. *8* Turn antenna power ON at the Antenna	

Control Unit. *9* If you replaced a linear LNB, re-optimize the polarization (refer to section 5.3). *10* Verify that the LNB operating properly and resume normal operation.	

This Page Intentionally Left Blank

7. Coastal 18 Technical Specifications

7.1. Installed Weight

	Coastal 18
General Assembly:	TBD
Radome Assembly (dry*):	35 lbs. (15.6 kg)
Total Weight (dry):	TBD

***NOTE: 34" Radome panels can absorb up to 50% moisture by weight.**

7.2. Radome

	Coastal 18
Diameter	20 inch (50.8cm)
Height	21 inch (53.3cm)
Mounting	4 x ¼-20 fasteners equally spaced on 12.73" D.B.C.

7.3. Antenna

	Coastal 18
Type	Spun Aluminum reflector
Size	18 inch (45.7cm)
Feed	Cassegrain feed with center focus splash plate
Polarization	Manual skew adjustment
Antenna Gain @ 12.35 GHz	35 dBic Typical
Min EIRP	49 dB
LNB	See Interchangeable Linear or Circular LNB information below.

7.4. Circular LNB Options

The Coastal Series antennas can be easily fitted with a variety of **circular** LNB assemblies. A **circular** feed tube must also be installed. Together they (the feed tube and the LNB) are capable of receiving **circular** polarization, however, the LNB must match the frequency band of the desired **circular** polarized satellite. Below are the **circular** LNBs which may be used with this system when the **circular** feed tube is installed.

7.4.1. US Circular LNB

Sea Tel Part Number:	115075-1
Type:	Dual output
LNB Manufacturer:	Wistron Neweb, but may vary
RF Frequencies:	12.2 - 12.7 GHz
IF Frequency:	950 - 1450 MHz
LO Frequency:	11.250 GHz
Noise Figure:	1.1 dB max.
Polarization modes:	LHCP or RHCP circular
Polarization control:	18VDC (LHCP) or 13VDC (RHCP) voltage switched

7.4.2. KoreaSat Circular LNB

Sea Tel Part Number:	116910-1
Type:	Single output
LNB Manufacturer:	HET, but may vary
RF Frequencies:	11.7 - 12.75 GHz
IF Frequency:	950 - 2000 MHz
LO Frequency:	11.750 GHz
Noise Figure:	0.8 dB max.
Polarization modes:	LHCP circular
Polarization control:	18 VDC

7.4.3. DLA Circular LNB

Sea Tel Part Number:	115075-2
Type:	Dual output
LNB Manufacturer:	Eagle Aspen, but may vary
RF Frequencies:	11.45 - 12.2 GHz
IF Frequency:	950 - 1700 MHz
LO Frequency:	10.5 GHz
Noise Figure:	1.1 dB max.
Polarization modes:	LHCP or RHCP circular
Polarization control:	18VDC (LHCP) or 13VDC (RHCP) voltage switched

7.5. Linear LNB Options

The Coastal Series antennas can be easily fitted with a variety of **linear** LNB assemblies. A **linear** feed tube must also be installed. Together they (the feed tube and the LNB) are capable of receiving **linear** polarization, however, the LNB must match the frequency band of the desired **linear** polarized satellite. Below are the **linear** LNBs which may be used with this system when the **linear** feed tube is installed.

7.5.1. Aussat Linear LNB

Sea Tel Part Number:	117508
Type:	Dual output
LNB Manufacturer:	Zinwell, but may vary
RF Frequencies:	12.25 - 12.75 GHz
IF Frequency:	950 - 1450 MHz
LO Frequency:	11.3 GHz
Noise Figure:	0.9 dB max.
Polarization modes:	Horizontal or Vertical Linear
Polarization control:	18VDC (H) or 13VDC (V) voltage switched

7.5.2. US Linear LNB

Sea Tel Part Number:	118740
Type:	Dual output
LNB Manufacturer:	Zinwell, but may vary
RF Frequencies:	11.7 - 12.2 GHz
IF Frequency:	950 - 1450 MHz
LO Frequency:	10.75 GHz

Noise Figure:	0.9 dB max.
Polarization modes:	Horizontal or Vertical Linear
Polarization control:	18VDC (H) or 13VDC (V) voltage switched

7.5.3. European Quad Universal Linear LNB

Sea Tel Part Number:	122386	
Type:	Quad output	
LNB Manufacturer:	Brainwave, but may vary	
	Low Band	**High Band**
RF Frequencies:	10.7 - 11.7 GHz	11.7 - 12.75 GHz
IF Frequencies:	950 - 1950 MHz	1100 - 2150 MHz
LO Frequencies:	9.75 GHz	10.6 GHz
Noise Figure:	0.7 dB typical	
Polarization modes:	2 Horiz., 2 Vert. Outputs	
Band Selection:	2 Hi, 2 Lo band outputs	

7.6. Stabilized Pedestal

Type	Three-axis: Elevation, Azimuth and Polarization
Stabilization	3 Dimensional Velocity mode Servo
Stab Accuracy	1.5 degrees MAX, 0.7 degrees RMS in presence of specified ship motions.
Level, Train Motors	Size 23 DC Step Motors with PWM Microstep drive
Pol skew Motor	Size 23 DC Step Motor
Inertial Reference	3 single axis Solid State Silicon Rate Sensors
Gravity Reference	Two Axis Fluid Tilt Sensor
Azimuth Reference	Closed Loop Tracking on Satellite signal
Stabilization rates	
Roll/Pitch	> 25 degrees / second
AZ./Turn	> 15 degrees / second
Range of Motion	
Elevation	Coastal 18 & 24 = 10 to 80 degrees
	Coastal 30 = 5 to 80 degrees
Azimuth	680 degrees
Polarization	+/- 90 degrees
Maximum Ship Motion	
Roll	+/- 25 degrees (implied)
Pitch	+/- 15 degrees (implied)
Elevation Pointing	
+/- 0 degrees of Roll	Coastal 18, 24 & 30 = 15 to 70 degrees
+/- 15 degrees of Roll	Coastal 18 & 24 = 25 to 60 degrees
	Coastal 30 = 20 to 60 degrees
+/- 25 degrees of Roll	Coastal 18 & 24 = 35 to 50 degrees
	Coastal 30 = 30 to 50 degrees

7.7. Pedestal Control Unit

Size	5 x 11 x 1.2 inches (12.7 x 27.9 x 3.05 cm)
Features	Fully integrated controller, sensors, motor drivers, and RF signal monitor. No external components.
Connectors	
Below Decks Interface	15 pin D-Sub at PCU and 9 pin HD CPC at Pedestal Base
Elevation/Azimuth Motors	9 pin D-Sub
RF Signal Monitor	Type F

7.7.1. DVB Compliant Tracking Receiver

Internal Satellite Identification Receiver	
Input Range	-85 to -35 dBm typical
Sensitivity	30 mV / dB typical
Bandwidth	Selectable 7.5-30 MHz in DVB Mode, 333 KHz in SCPC Mode or 125 KHz in NBIF with AFC mode.
Tuning range	950 to 2150 MHz in 1 MHz increments in DVB Mode, 125 KHz increments in SCPC or 62.5 KHz increments in NBIF mode.
Polarity switching	13 VDC output to select **Vertical** OR **RHCP** polarity.
	18 VDC to output select **Horizontal** OR **LHCP** polarity
Band Switching:	22kHz continuous tone output to select **High** band, No tone to select **Low** band.
Satellite ID	Network ID for DVB signals. QPSK demodulator and FEC decoder lock for DSS, or DVB without NID (forced NID).
QPSK Demodulator	3000 to 30000 baud (ksps)
FEC Decoder	1/2, 2/3, 3/4, 5/6, 6/7, 7/8, Automatic, SCPC or NBIF.
Pipeline Decoder	DVB or DSS compatible.

7.8. Below Decks Interface

Size	3 inch x 5 inch (7.62 x 12.7cm) panel
Display	2 Line, 16 Character Backlit LCD
Controls	5 integrated touch switches
Indicators	2 LED status indicators
Serial Interface	9600 baud RS-232 Interface for diagnostics and computer interface.
Connectors	
DC Power	2 Screw Terminals
Pedestal Interface	8 Screw Terminals
RS-232 Interface	9 Pin Male D-Sub connector (DTE)

7.9. Power Requirements

Voltage	11-16 VDC normal operating range
Current	3.0 Amps nominal @ 13.8 VDC
Transient Protection	
Load Dump	60 volts
Inductive coupling	+/- 200v @ 1 uSec
Reverse Battery	Indefinite
24V Jump Start	1 minute

7.10. *Environmental*

Temperature	-20 to +55 degrees C.
Humidity	Up to l00% @ 40 degrees C.
Rain	Up to 4 inches per hour. Degraded RF performance when the radome surface is wet.
Wind	Up to 100 MPH from any direction.
Corrosion	Parts are corrosion resistant or treated to endure effects of salt air and salt spray.
Ship Motions for specified pointing accuracy	
Roll	+/-20 degrees with 8-12 sec periods
Pitch	+/-10 degrees with 6-12 sec periods
Yaw	+/-8 degrees with 15 to 20 sec periods
Turning rate	Up to 12 deg/sec.

8. Computer Interface

A computer can be connected to the antenna control panel to allow you to provide access to ALL the parameter settings of the query the Coastal Series antenna and view the responses it provides. The commands to set the parameters in the Coastal Series PCU are summarized below.

Changing the parameters for the primary and secondary satellites may be easily done using the computer interface. You may consult the Lyngemark satellite web site at www.lyngsat.com for detailed tuning frequencies and network ID information (Note hold your cursor over the Ku band transponder frequency to show the L-band IF tuning value in the lower left status bar display based on the most popular Local Oscillator ffrequencies). If you LNB uses a different Local Oscillator frequency, you will have to calculate the IF to tune to (RF – LO = IF).

8.1. Connecting the computer

1 Connect the computers COM port to the Receiver Interface port on the rear of the Display Antenna Control Panel using a computer "DB-9 Serial Extension Cable" (male-female) available in most computer stores. *2* Use Hyper Terminal, or another communication program, to communicate with the Series 98 system. If you have previously set up Hyper Terminal skip to step 7 below. *3* COM port settings should be set to 9600 bits per second, 8 data bits, No parity, 1 stop bit. *4* Assure that the Flow Control is set to "None".	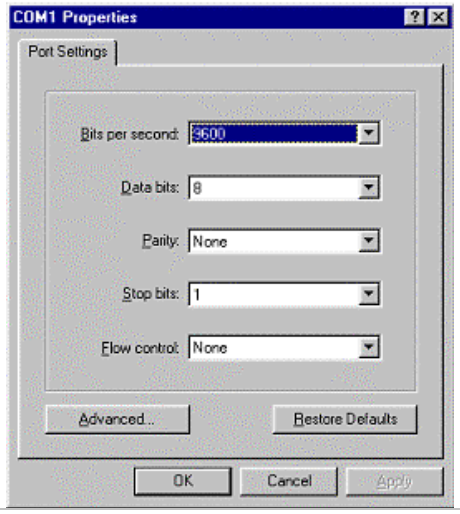
5 Open Hyper Terminal and select the settings tab. *6* Click on ASCII Setup to configure Hyper Terminal.	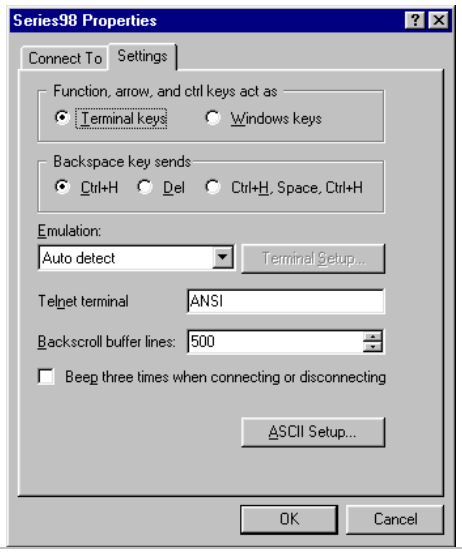

7 Check “Send line ends with line feeds”, “Echo typed characters locally” and “Append line feeds to incoming line ends”. Click OK.	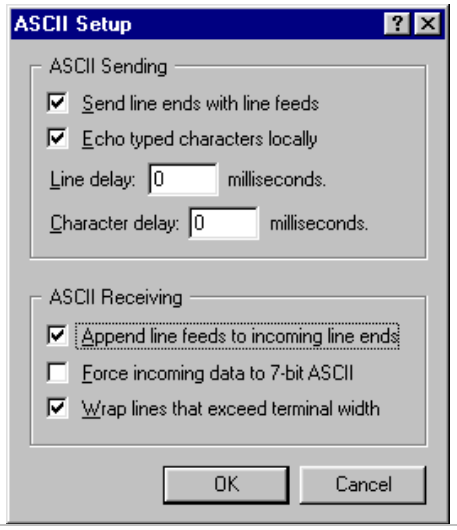
8 Type **^0086** and hit **ENTER**. *9* Refer to the command information below to communicate with the antenna system. *The Display Antenna Control Panel will be locked while you are connected to the computer.* *10* When you are finished, close the terminal program and disconnect the computer from the Display Antenna Control Panel. *11* At the Display Antenna Control Panel, Turn power **OFF**. Wait 10 seconds and turn power **ON**.	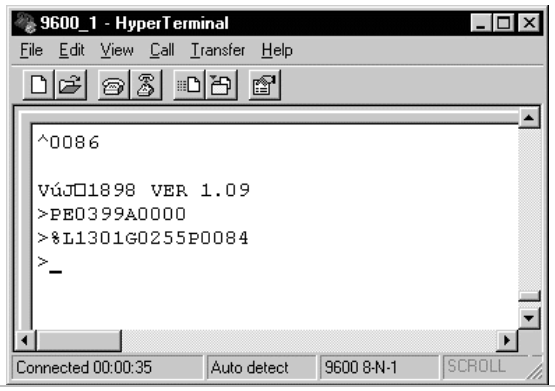

8.2. Communicating with the Coastal Series PCU

The commands listed below are case sensitive, be sure to use the correct upper/lower case of the characters sent from the computer. The associated responses for each of the commands are shown below. An explanation for each group of characters in each response is included. While in Hyper Terminal, type in desired command key to query for desired responses:

COMMAND SUMMARY - Coastal 18, 24, 32 Version 2.05e

Monitor	Function	Response
@	GPS receiver position	DDmm,N,DDDmm,W,A/N/-
@	GPS memory position (second query)	DDd,N,DDDd,W,m
V	Software version	Coastal MM VER 2.nn cr
P	Elevation, Azimuth, Polang, Relative	EddddAddddpddddJdddd cr
R	Signal level, Threshold, Network ID, Status	Ldddd**t**dddd**n**xxxx **@@@ k@@** cr
G	Roll and Pitch rate sensor position	RxxxxPxxxx cr
H	Cross-level tilt, Level tilt, Auto Thresh, Pol Pot	CxxxxLxxxxuddddOnnnn*cr
q(k)	(Sat k) Name, Longitude, Pol Offset	aABCDEF **gddddW o+nn***cr
r(k)	(Sat k) Tuning Freq, Alt Freq, Baud, FEC, NID	fnnnnhnnnnbnnnnnvXnxxxxcr

Control	Function
^0080↵	Start bootloader.
^0086↵	Disable DACP updates and enter diagnostic test mode.
^0090↵	Reboot PCU.
edddd↵	Set elevation target to ddd.d degrees.
jdddd↵	Set pseudo azimuth target to ddd.d degrees.
mnn↵	Set Model type to nn (range 18, 24, 30).
pnnn↵	Set POLANG target to nnn degrees (range, 20 to 160, nominal setting of 90).
tnnnn↵	Set THRESHOLD to nnnn counts (0-4095).
unnn↵	Set Auto Threshold to nnn counts (range 000 to 255, nominal 150).
a(k)aaaaaa↵	Set Satellite (k) Name to aaaaaa.
b(k)nnnnn↵	Set Satellite (k) Baud (symbol) rate to nnnnn.
f(k)nnnn↵	Set Satellite (k) primary tuning frequency (950-2047)..
g(k)ddddW↵	Set Satellite (k) longitude to ddd.d E/W degrees.
h(k)nnnn↵	Set Satellite (k) Alt tuning frequency (950-2047) ** Not presently used, set to 0
n(k)xxxx↵	Set Satellite (k) Network ID (NID) to xxxx (0000-FFFF).
o(k)[-]nn↵	Set Satellite (k) Polang Offset +/- nn degrees
C	Tracking ON
D	Tracking OFF, Search OFF.
N	Select next visible satellite
W	Write parameters to NVRAM
Y	Restore DACP operation
Z	Send selected satellite tuning parameters to DVB receiver.
2	Elevation DOWN
8	Elevation UP
4	Azimuth LEFT
6	Azimuth RIGHT
1	AZ rate bias DOWN (factory diagnostic only)
3	AZ rate bias UP (factory diagnostic only)
5	Tilt Bias reset
0	Set tilt Bias to current tilt readings (zero tilt display)
7	Toggle Search ON/OFF (no parameter initialization)
9	Reverse Search Azimuth Direction

Abbreviations	
aaaa	Alpha-Numeric characters (1-9, A-Z, a-z)
dddd	Decimal digits in tenths of degrees. Equal to ddd.d degrees.
DDmm	Decimal degrees (0-90 or 0-180) and decimal minutes (00-59).
nnnn	Decimal digits in counts. Range is nominally 0-4095 or 950-2047
nnn	Decimal digits in counts or degrees. Range is 0-255.
xxxx	Hexadecimal digits. Range is 0000-FFFF.
k	Satellite index (1-6)
↵ or **cr**	Enter or Carriage Return

This page left blank intentionally

9. DRAWINGS

The following drawings are included with this manual for installation and maintenance reference.

9.1. Coastal 18 without Polarization Drawings

This page left blank intentionally

COASTAL SERIES SYSTEM CONFIGURATOR CHART

System Description	Polang	System part#	General Assy	GA Install	Radome size	Radome Assy	Feed type:	Feed description:	LNB part number:	Manual	Antenn System Schematic	System Block Diagram
Coastal 18, EU	Yes	124764-001	124519-1	124736	20"	116715	Universal	dual linear	117473-2	124591	124735	124665-1
Coastal 18, Aussat	Yes	124764-002	124519-1	124736	20"	116715	Aussat	dual linear	117508-11	124591	124735	124665-1
Coastal 18, US Linear	Yes	124764-003	124519-1	124736	20"	116715	US	dual linear	117508-2	124591	124735	124665-1
Coastal 18, Euro Quad	Yes	124764-004	124519-1	124736	20"	116715	Euro	dual quad	122386	124591	124735	124665-1
Coastal 18, DBS	No	124764-005	124519-2	124736	20"	116715	US	dual circular	115075-1	124769	124735	124665-3
Coastal 18, Korea-Sat	No	124764-006	124519-2	124736	20"	116715	Korea-Sat	dual circular	124295	124769	124735	124665-3
Coastal 18, DLA	No	124764-007	124519-2	124736	20"	116715	DLA	dual circular	115075-2	124769	124735	124665-3
Coastal 18, Americas	No	124764-008	124519-2	124736	20"	116715	Americas	dual circular	118685-2	124769	124735	124665-3
Coastal 24, EU	Yes	124764-017	123706-1	124736	27"	118302	Universal	dual linear	117473-2	124740	124735	124665-5
Coastal 24, Aussat	Yes	124764-018	123706-1	124736	27"	118302	Aussat	dual linear	123559-3	124740	124735	124665-5
Coastal 24, US Linear	Yes	124764-019	123706-1	124736	27"	118302	US	dual linear	117508-2	124740	124735	124665-5
Coastal 24, Euro Quad	Yes	124764-020	123706-1	124736	27"	118302	Euro	dual quad	122386	124740	124735	124665-5
Coastal 24, DBS	No	124764-021	123706-2	124736	27"	118302	US	dual circular	123559-1	124740	124735	124665-6
Coastal 24, Korea-Sat	No	124764-022	123706-2	124736	27"	118302	Korea-Sat	dual circular	124295	124740	124735	124665-6
Coastal 24, DLA	No	124764-023	123706-2	124736	27"	118302	DLA	dual circular	123559-2	124740	124735	124665-6
Coastal 24, Americas	No	124764-024	123706-2	124736	27"	118302	Americas	dual circular	118685-2	124740	124735	124665-6
Coastal 30, EU	Yes	124764-025	123813-1	124736	34"	121498	Universal	dual linear	117473-2	124740	124735	124665-7
Coastal 30, Aussat	Yes	124764-026	123813-1	124736	34"	121498	Aussat	dual linear	123559-3	124740	124735	124665-7
Coastal 30, US Linear	Yes	124764-027	123813-1	124736	34"	121498	US	dual linear	117508-2	124740	124735	124665-7
Coastal 30, Euroquad	Yes	124764-028	123813-1	124736	34"	121498	Euro	dual quad	122386	124740	124735	124665-7
Coastal 30, DBS	No	124764-029	123813-2	124736	34"	121498	US	dual circular	123559-1	124740	124735	124665-8
Coastal 30, Korea-Sat	No	124764-030	123813-2	124736	34"	121498	Korea-Sat	dual circular	124295	124740	124735	124665-8
Coastal 30, DLA	No	124764-031	123813-2	124736	34"	121498	DLA	dual circular	123559-2	124740	124735	124665-8
Coastal 30, Americas	No	124764-032	123813-2	124736	34"	121498	Americas	dual circular	118685-2	124740	124735	124665-8
Coastal 24, DBS	Yes	124764-033	123706-1	124736	27"	118302	US	dual circular	123559-1	124740	124735	124665-5
Coastal 24, Korea-Sat	Yes	124764-034	123706-1	124736	27"	118302	Korea-Sat	dual circular	124295	124740	124735	124665-5
Coastal 24, DLA	Yes	124764-035	123706-1	124736	27"	118302	DLA	dual circular	123559-2	124740	124735	124665-5
Coastal 24, Americas	Yes	124764-036	123706-1	124736	27"	118302	Americas	dual circular	118685-2	124740	124735	124665-5
Coastal 30, DBS	Yes	124764-037	123813-1	124736	34"	121498	US	dual circular	123559-1	124740	124735	124665-7
Coastal 30, Korea-Sat	Yes	124764-038	123813-1	124736	34"	121498	Korea-Sat	dual circular	124295	124740	124735	124665-7
Coastal 30, DLA	Yes	124764-039	123813-1	124736	34"	121498	DLA	dual circular	123559-2	124740	124735	124665-7
Coastal 30, Americas	Yes	124764-040	123813-1	124736	34"	121498	Americas	dual circular	118685-2	124740	124735	124665-7

SINGLE LEVEL MFG BILL OF MATERIAL

FIND	QTY	PART NO	REV	DESCRIPTION	REFERENCE DESIGNATOR
	0 EA	124869		SOFTWARE, COASTAL 18 PCU	
1	1 EA	124518-1	A	PEDESTAL ASS'Y, COASTAL 18	
2	1 EA	124517-1	A	ANTENNA ASS'Y, COASTAL 18, NO POL.	
3	1 EA	124651-1	C	HARNESS ASS'Y, INTERFACE, COASTAL S	NOT SHOWN IN DWG (SEE REF DOC# 125011)
4	1 EA	121966-2	B	GPS ANTENNA, RETERMINATED, 21.0 L	
7	1 EA	117164-20	A	CABLE ASS'Y, RG-179 COAX, F TO F, 20 IN	NOT SHOWN IN DWG (SEE REF DOC# 125011)
8	1 EA	117164-43	A	CABLE ASS'Y, RG-179 COAX, F TO F, 43 IN	NOT SHOWN IN DWG (SEE REF DOC# 125011)
10	2 EA	111679-5	0	NYLON CABLE CLAMP, 3/8 DIA	
14	3 EA	124648	X4	STRUT, COUNTERWEIGHT	
15	1 EA	124649	X3	COUNTERWEIGHT, .86 LBS.	
26	1 EA	119205	A	BRACKET, CONNECTOR, ADAPTER	
27	4 EA	114178	O	ADAPTER, F(F)-F(F) (BULLET), 1.0 IN L	
28	4 EA	119967		NUT, HEX, PANEL, 3/8-32	
29	4 EA	119952-031	A1	WASHER, STAR, INTERNAL TOOTH, 3/8, S	
50	11 EA	114588-108		SCREW, PAN HD, PHIL, 4-40 x 3/8, S.S.	
51	6 EA	114588-192		SCREW, PAN HD, PHIL, 8-32 x 3/8, S.S.	
52	5 EA	114588-194		SCREW, PAN HD, PHIL, 8-32 x 1/2, S.S.	
53	14 EA	114580-005		WASHER, FLAT, #4, S.S.	
54	5 EA	114583-009		NUT, HEX, 8-32, S.S.	
55	16 EA	114580-009		WASHER, FLAT, #8, S.S.	
56	3 EA	114583-005		NUT, HEX, 4-40, S.S.	
57	3 EA	111679-1	0	NYLON CABLE CLAMP, 1/8 DIA	
58	3 IN	118144-13		TAPE, DOUBLE-SIDED FOAM, .04 THH, 1.0	

Sea Tel

GENERAL ASS'Y, COASTAL 18, DBS

PROD FAMILY	EFF. DATE	SHT 1 OF 1	DRAWING NUMBER	REV
SERIES 98	21-Feb-06		**124519-2**	**A1**

REVISION HISTORY				
REV	ECO#	DATE	DESCRIPTION	BY
A	5098	02-17-06	RELEASED TO PRODUCTION, WAS X9	K.D.H.
A1	N/A	02-21-06	ADDED DASH TABLE	K.D.H.

NOTES: UNLESS OTHERWISE SPECIFIED

1. APPLY ADHESIVE PER SEATEL SPEC. 121730.
2. TORQUE THREADED FASTENERS PER SEATEL SPEC. 122305.
3. ROUTE ALL HARNESS AND CABLES ASSEMBLIES PER SEATEL SPEC. 121872.
4. TERMINATE ALL UNUSED COAX CONNECTORS.

REFERENCE DRAWINGS.

124665 SYSTEM BLOCK DIAGRAM.
117279 ANTENNA SYSTEM SCHEMATIC.
125011 HARNESS ROUTING DOC.
124736 G.A. INSTALLATION ARRANGEMENT.

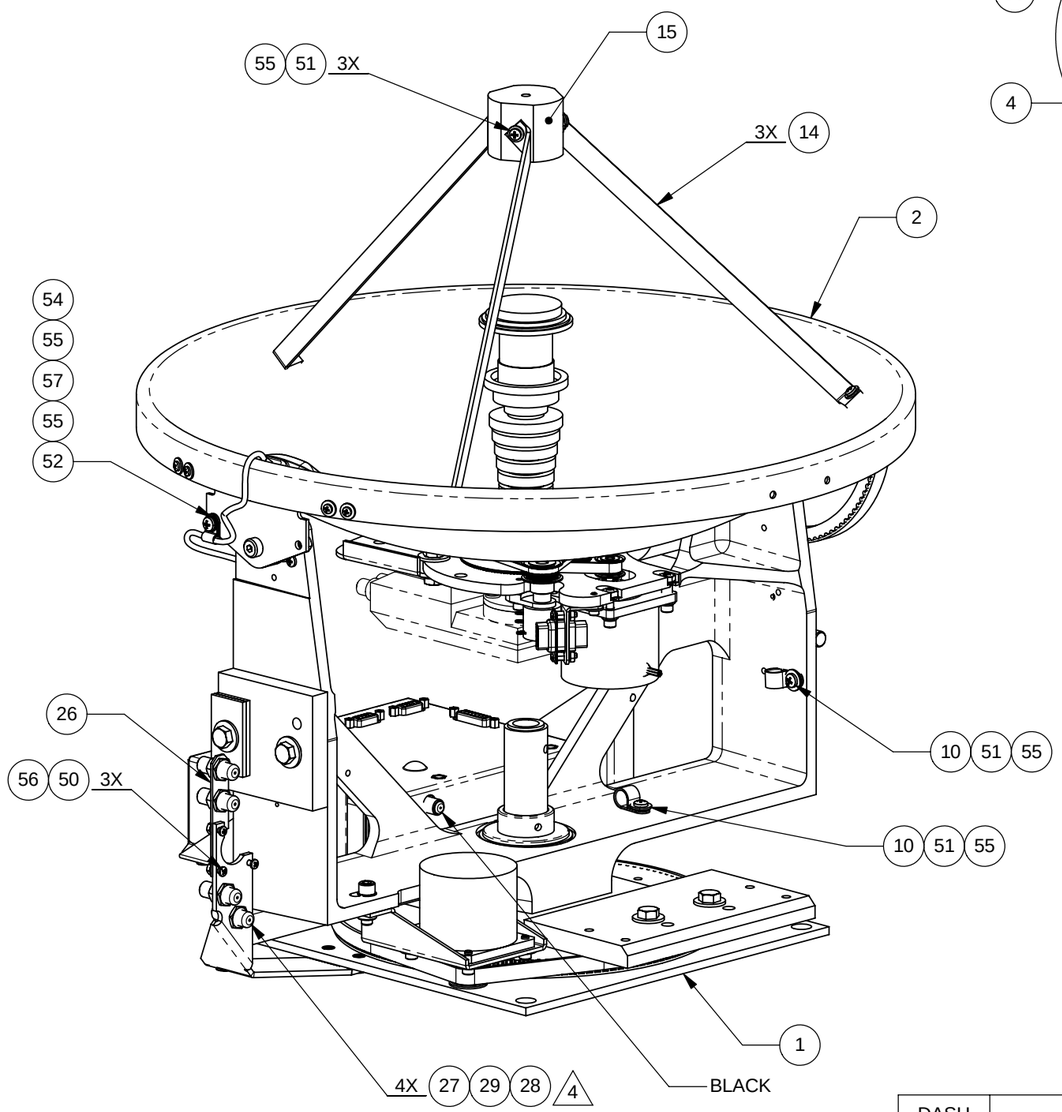

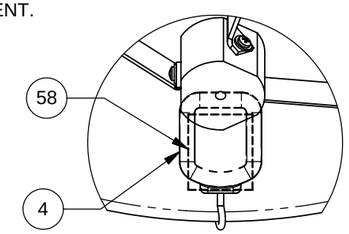

DETAIL 'A'
SCALE: 1:3

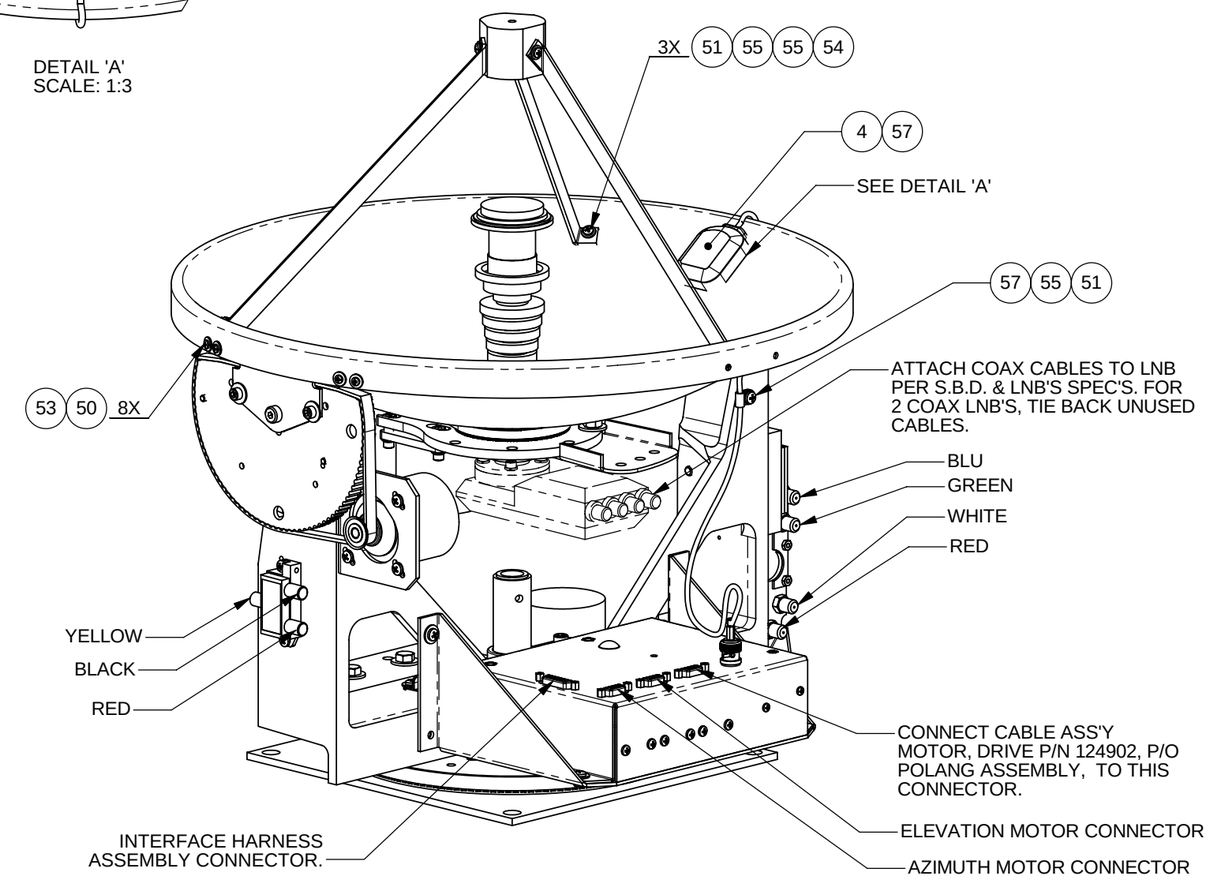

DASH	DESCRIPTION
-1	WITH MOTORIZED POL
-2	WITHOUT MOTORIZED POL

TOLERANCES UNLESS OTHERWISE SPECIFIED	DRAWN BY: ALVARO	SeaTel® 4030 NELSON AVENUE CONCORD, CA 94520 Tel. 925-798-7979 Fax. 925-798-7986
X.X = ±.050 X.XX = ±.020 X.XXX = ±.005 ANGLES: ±.5° INTERPRET TOLERANCING PER ASME Y14.5M - 1994	DRAWN DATE: 07-07-05	
	APPROVED BY:	TITLE: GENERAL ASSEMBLY COASTAL 18
MATERIAL: N/A	APPROVED DATE:	
FINISH: N/A	SIZE: B / SCALE: NOT TO SCALE	DRAWING NUMBER: 124519 / REV: A1
3rd ANGLE PROJECTION	FIRST USED: COASTAL 18	SHEET NUMBER: 1 OF 1

SINGLE LEVEL MFG BILL OF MATERIAL

FIND	QTY	PART NO	REV	DESCRIPTION	REFERENCE DESIGNATOR
1	1 EA	124502-1	A	BASE SPINDLE/YOKE ASS'Y, COASTAL 18	
2	1 EA	124516-1	X3	ELEVATION ASS'Y, COASTAL 18	
3	1 EA	121229	L	ENCLOSURE ASS'Y, 2-AXIS	
4	1 EA	110873-3	D	RF SPLITTER	
5	1 EA	125092	X1	COUNTERWEIGHT, 2.28 LB	
8	1 EA	112573-2	B	TRIM WEIGHT, 1.17 LBS	
9	4 EA	108517-2	B	WEIGHT, TRIM 1.0 OZ	
10	1 EA	124468	X1	BRACKET, PCU	
50	4 EA	114588-194		SCREW, PAN HD, PHIL, 8-32 x 1/2, S.S.	
51	4 EA	114588-190		SCREW, PAN HD, PHIL, 8-32 x 1/4, S.S.	
52	2 EA	114586-540		SCREW, HEX HD, 1/4-20 x 1-1/4, S.S.	
53	2 EA	114586-538		SCREW, HEX HD, 1/4-20 x 1, S.S.	
55	4 EA	114580-009		WASHER, FLAT, #8, S.S.	
56	4 EA	114580-029		WASHER, FLAT, 1/4, S.S.	
59	2 EA	114588-108		SCREW, PAN HD, PHIL, 4-40 x 3/8, S.S.	
60	2 EA	114580-005		WASHER, FLAT, #4, S.S.	

Sea Tel

PEDESTAL ASS'Y, COASTAL 18

PROD FAMILY	EFF. DATE	SHT 1 OF 1	DRAWING NUMBER	REV
COMMON	21-Feb-06		**124518-1**	**A**

NOTES: UNLESS OTHERWISE SPECIFIED
1. APPLY ADHESIVE PER SEATEL SPEC. 121730.
2. TORQUE THREADED FASTENERS PER SEATEL SPEC. 122305.

REVISION HISTORY				
REV	ECO#	DATE	DESCRIPTION	BY
A	5098	02-08-06	ADDED ITEMS 6, 11, 57-60 , REPLACED ITEMS 4-5, REMOVED ITEMS 6-7, 54, RELEASED FROM X4 TO A	K.D.H.
A1	5098	02-16-06	REMOVED ITEMS 11, 57 & 58, UPDATED VIEWS	K.D.H.

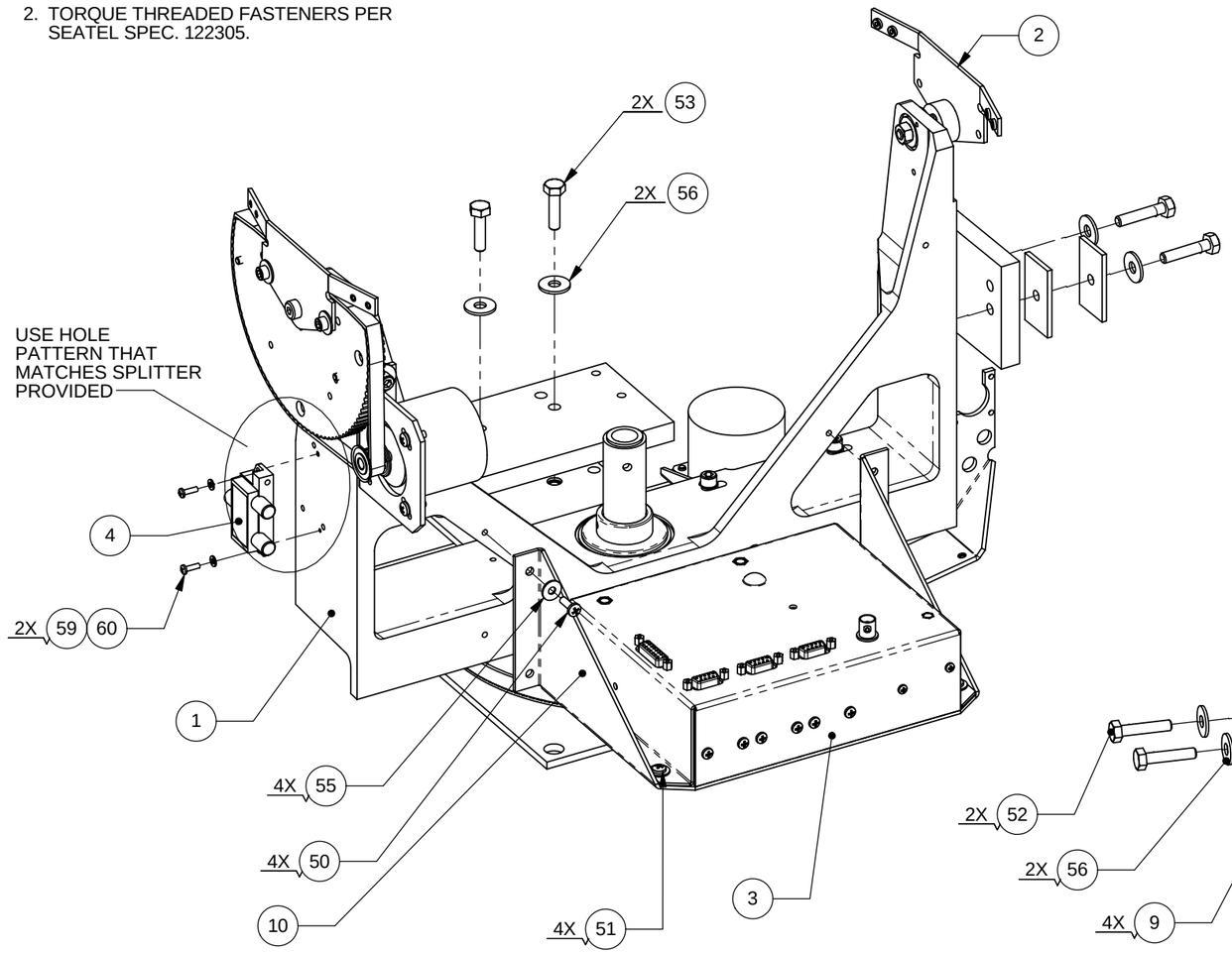

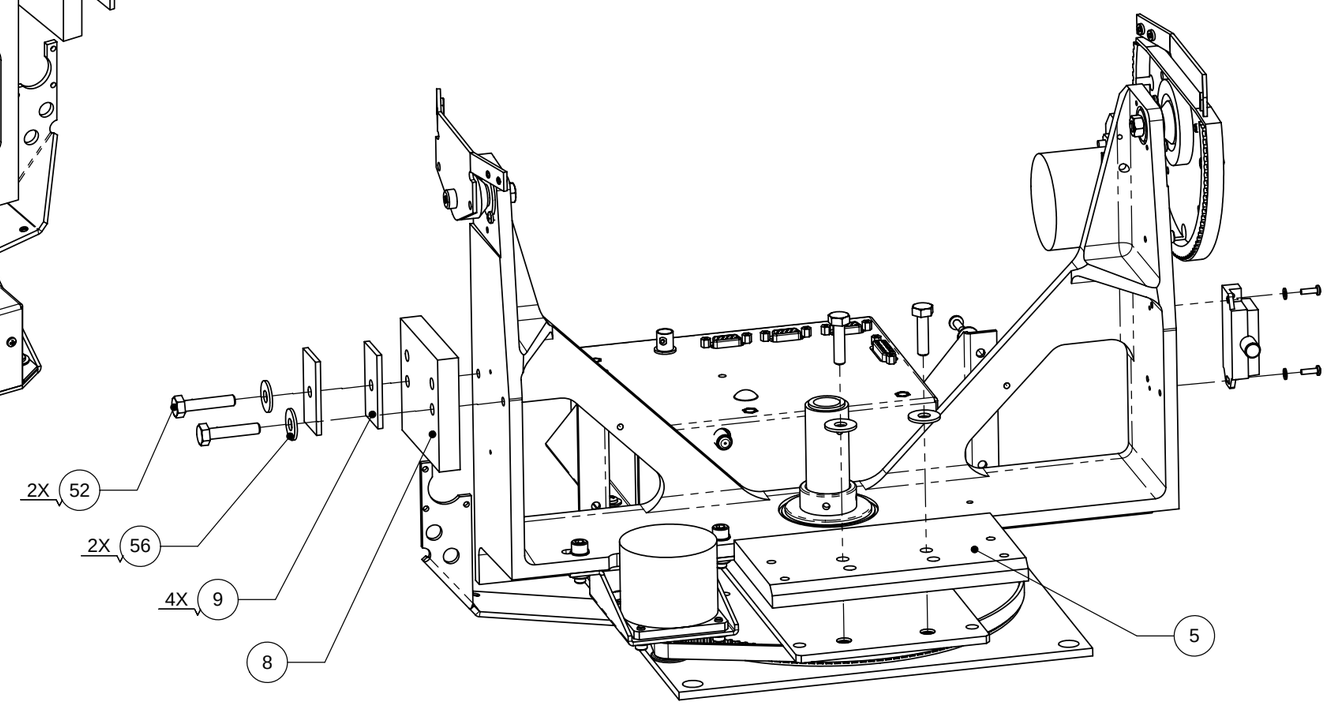

TOLERANCES UNLESS OTHERWISE SPECIFIED	DRAWN BY: ALVARO	Sea Tel® 4030 NELSON AVENUE CONCORD, CA 94520 Tel. 925-798-7979 Fax. 925-798-7986	
X.X = ±.050 X.XX = ±.020 X.XXX = ±.005 ANGLES: ±.5° INTERPRET TOLERANCING PER ASME Y14.5M - 1994	DRAWN DATE: 06-27-05 APPROVED BY:	TITLE: PEDESTAL ASSSEMBLY COASTAL 18	
MATERIAL: N/A	APPROVED DATE:		
FINISH: N/A	SIZE: B / SCALE: 1:3	DRAWING NUMBER 124518	REV A1
3rd ANGLE PROJECTION	FIRST USED: 1898 COASTAL	SHEET NUMBER 1 OF 1	

SINGLE LEVEL MFG BILL OF MATERIAL

FIND	QTY	PART NO	REV	DESCRIPTION	REFERENCE DESIGNATOR
1	1 EA	124465	X4	REFLECTOR, 18 IN MACHINING	
2	1 EA	124523-2		VERTEX FEED, CIRCULAR, 18 IN	
3	1 EA	123745	X1	MOUNTING CUFF, LNB	
50	4 EA	114593-104		SCREW, SOCKET HD, 4-40 x 3/8, S.S.	
51	8 EA	114580-005		WASHER, FLAT, #4, S.S.	
52	3 EA	114590-144		SCREW, SOCKET SET-CUP, 6-32 x 1/4, S.S	
53	4 EA	114593-106		SCREW, SOCKET HD, 4-40 x 1/2, S.S.	
54	8 EA	114581-005		WASHER, LOCK, #4, S.S.	

Sea Tel

ANTENNA ASS'Y, COASTAL 18, NO POL.

PROD FAMILY	EFF. DATE	SHT 1 OF 1	DRAWING NUMBER	REV
COMMON	21-Feb-06		**124517-1**	**A**

NOTES: UNLESS OTHERWISE SPECIFIED
1. APPLY ADHESIVE PER SEATEL SPEC. 121730.
2. TORQUE THREADED FASTENERS PER SEATEL SPEC. 122305.

REVISION HISTORY				
REV	ECO#	DATE	DESCRIPTION	BY
A	NONE	02-21-06	RELEASED TO PRODUCTION, WAS X1	K.D.H.

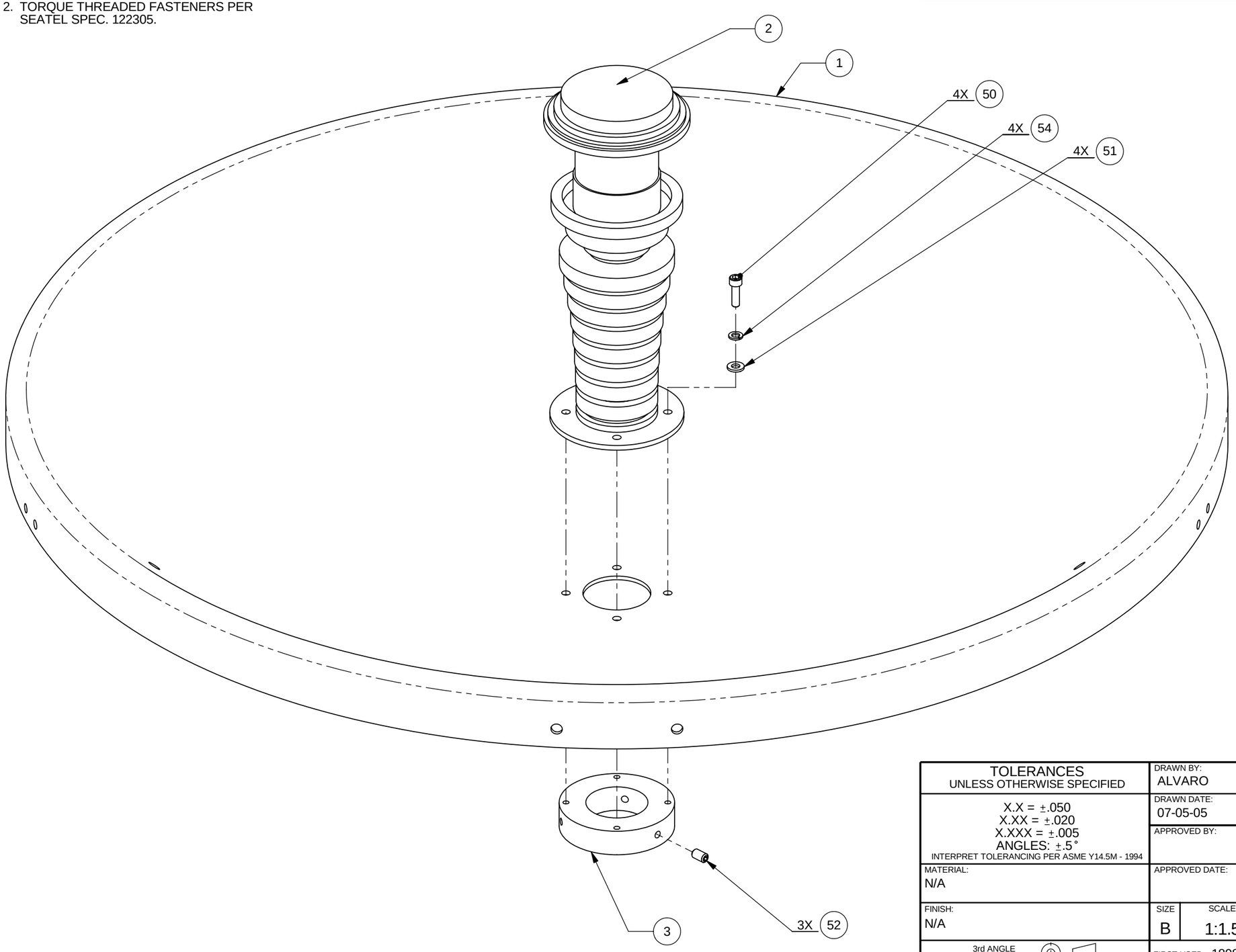

TOLERANCES UNLESS OTHERWISE SPECIFIED	DRAWN BY: ALVARO		SeaTel® 4030 NELSON AVENUE CONCORD, CA 94520 Tel. 925-798-7979 Fax. 925-798-7986
X.X = ±.050 X.XX = ±.020 X.XXX = ±.005 ANGLES: ±.5° INTERPRET TOLERANCING PER ASME Y14.5M - 1994	DRAWN DATE: 07-05-05		
	APPROVED BY:		TITLE: ANTENNA ASSEMBLY 1898 COASTAL
MATERIAL: N/A	APPROVED DATE:		
FINISH: N/A	SIZE: B	SCALE: 1:1.5	DRAWING NUMBER 124517 — REV A
3rd ANGLE PROJECTION	FIRST USED: 1898 COASTAL		SHEET NUMBER 1 OF 1

SINGLE LEVEL MFG BILL OF MATERIAL

FIND	QTY	PART NO	REV	DESCRIPTION	REFERENCE DESIGNATOR
1	1 EA	124519-2	A1	GENERAL ASS'Y, COASTAL 18, DBS	
2	1 EA	124517-1	A	ANTENNA ASS'Y, COASTAL 18, NO POL.	
3	0 EA	COMMENTS		SEE COMMENTS	SEE DASH TABLE
4	1 EA	121229	L	ENCLOSURE ASS'Y, 2-AXIS	
5	1 EA	117043-5	X1	HARNESS ASS'Y, INTERFACE	
6	1 EA	119205	A	BRACKET, CONNECTOR, ADAPTER	
7	2 EA	114178	O	ADAPTER, F(F)-F(F) (BULLET), 1.0 IN L	
8	1 EA	117230-2	C	CABLE ASS'Y, SHIELDED CONTROL, 50 FT	
9	4 EA	113480-1	C1	CABLE ASS'Y, RF, RG6, 50 FT.	
10	1 EA	110873-3	D	RF SPLITTER	
11	1 EA	117164-36	A	CABLE ASS'Y, RG-179 COAX, F TO F, 36 IN	
12	1 EA	120422-1	A1	MULTISWITCH, DUO-SAT, 5 IN X 4 OUT	CFE
13	1 EA	119547	F	ANTENNA CONTROL PANEL ASS'Y, XX98	
14	1 EA	117209-2		CONNECTOR, PLUG, .200	
15	1 EA	119732-1	A2	MULTI-SWITCH, RF, 3 IN X 4 OUT	

SeaTel

SYSTEM BLOCK DIAGRAM, COASTAL 18 CIRCULAR

PROD FAMILY	EFF. DATE	SHT 1 OF 1	DRAWING NUMBER	REV
LIT	21-Feb-06		**124665-3**	**B**

REVISION HISTORY				
REV	ECO#	DATE	DESCRIPTION	BY
A	N/A	7/27/05	NEW DRAWING.	AEF
B	5046	10/31/05	REPLACED ITEM 10 PCB ASS'Y, DIRECTIONAL COUPLER FROM P/N: 118967 TO RF SPLITTER P/N: 110873-3	AEF
			NOTES 1 & 2 ADDED; CONNECTION DETAIL FOR DUAL CIRCULAR LNB; TABLE FOR LNB POTIONS ADDED.	

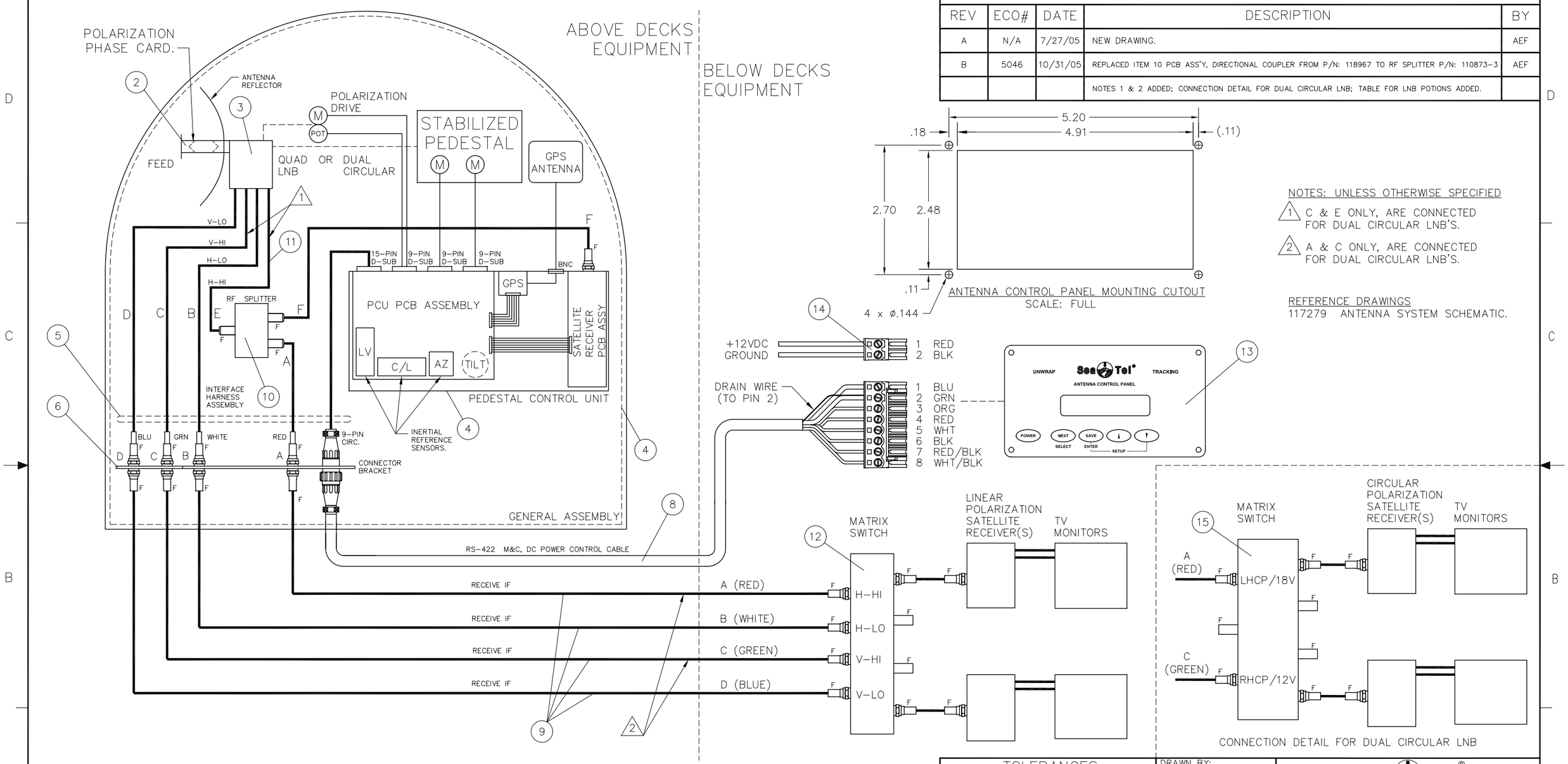

DASH TABLE	
DASH NO.	MODEL NO.
-1	18 LINEAR
-2	18 LINEAR W/O POL.
-3	18 CIRCULAR
-4	20
-5	24 LINEAR/CIRCULAR
-6	24 W/O POL.
-7	30 LINEAR/CIRCULAR
-8	30 W/O POL.

LNB OPTIONS			
#	REGION	FEED TYPE	FEED P/N
DUAL	UNIVERSAL	LINEAR	117473-2
DUAL	AUSSAT	LINEAR	117508-11
DUAL	US	LINEAR	117508-2
QUAD	EURO	LINEAR	122386
DUAL	US	CIRCULAR	115075-1
DUAL	KOREA-SAT	CIRCULAR	124295
DAUL	DLA	CIRCULAR	115075-2
DUAL	AMERICAS	CIRCULAR	118685-2

TOLERANCES
UNLESS OTHERWISE SPECIFIED
X.X = ±.050
X.XX = ±.020
X.XXX = ±.005
ANGLES: ±.5°
INTERPRET TOLERANCING PER ASME Y14.5M - 1994

MATERIAL: N/A

FINISH: N/A

3rd ANGLE PROJECTION

DRAWN BY: ALVARO
DRAWN DATE: 07-27-05
APPROVED BY:
APPROVED DATE:

Sea Tel®
4030 NELSON AVENUE
CONCORD, CA 94520
Tel. 925-798-7979 Fax. 925-798-7986

TITLE: SYSTEM BLOCK DIAGRAM COASTAL SERIES

SIZE: B
SCALE: NOT TO SCALE
DRAWING NUMBER: 124665
REV: B
FIRST USED:
SHEET NUMBER: 1 OF 1

DOCUMENT NO. 124225-4_A

REVISION HISTORY				
REV	ECO#	DATE	DESCRIPTION	BY
A	N/A	8/31/05	NEW DRAWING	AEF
A1	N/A	11/7/05	BOW REFERENCE MARKER ADDED, ADDED DETAIL VIEW FOR COASTAL 30, ADDED ITEMS 13 – 15 ON COASTAL 30	AEF
			ADDED TERMINATOR, 75 OHM (ITEM 9 & 16)	

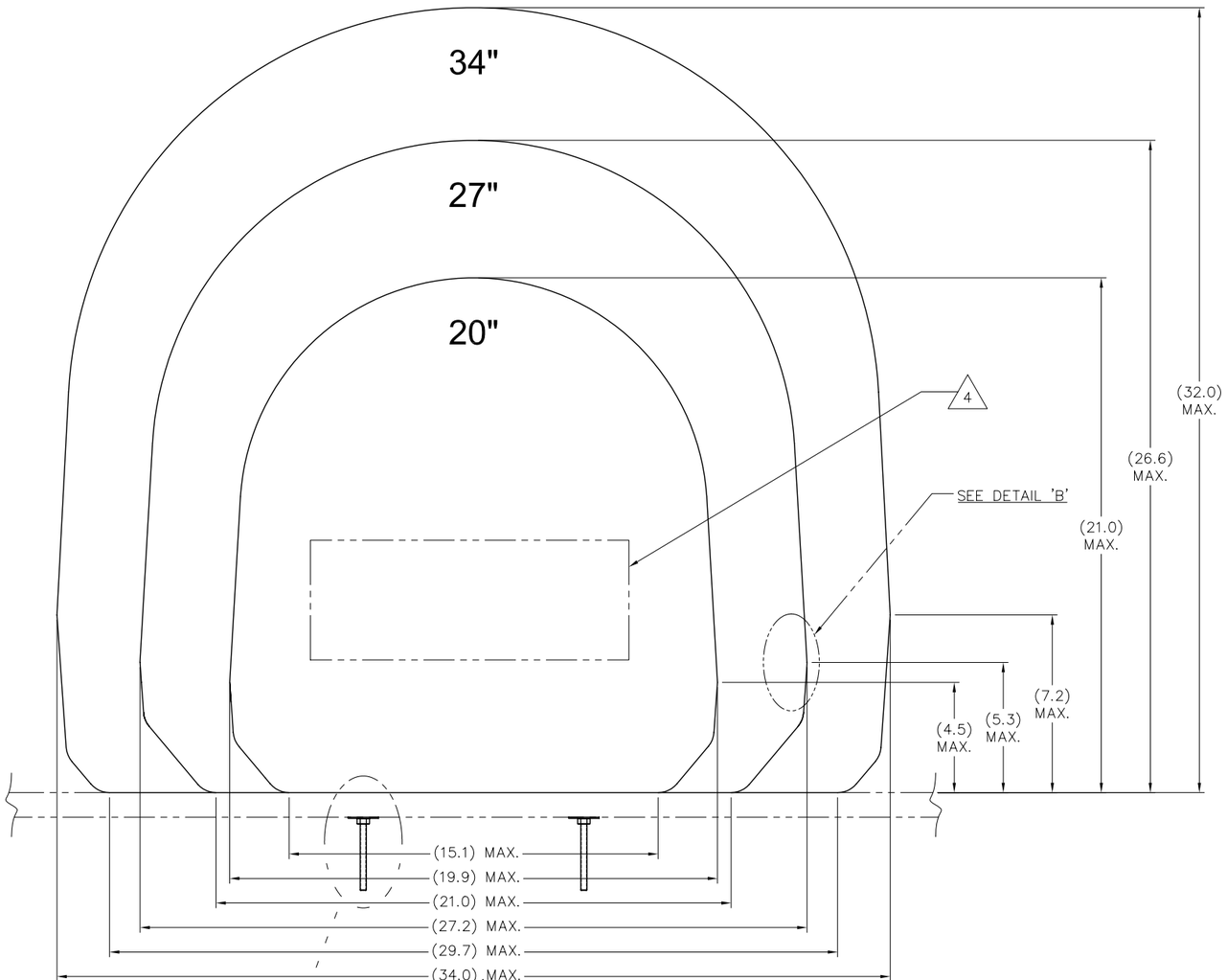

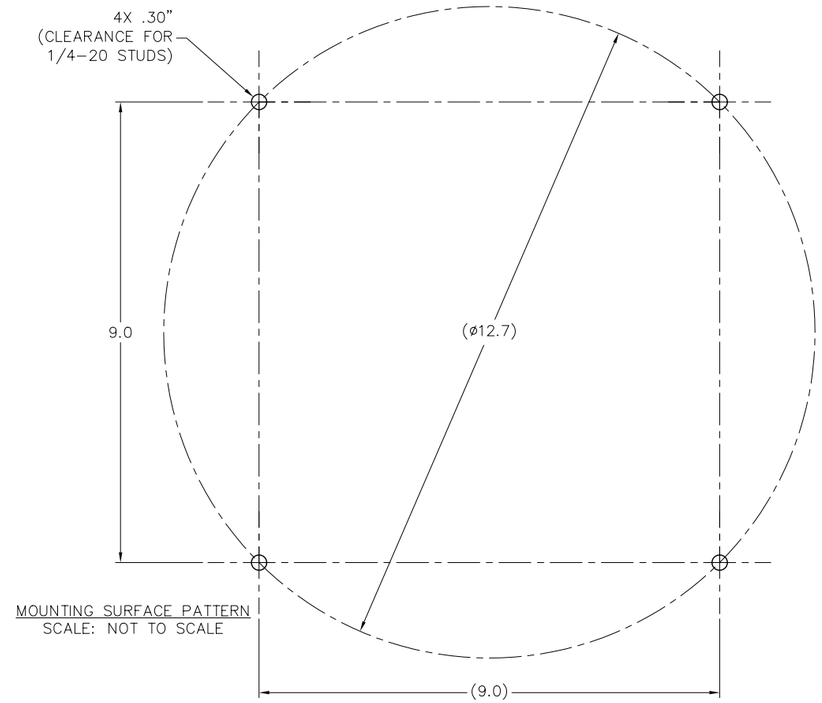

MOUNTING SURFACE PATTERN
SCALE: NOT TO SCALE

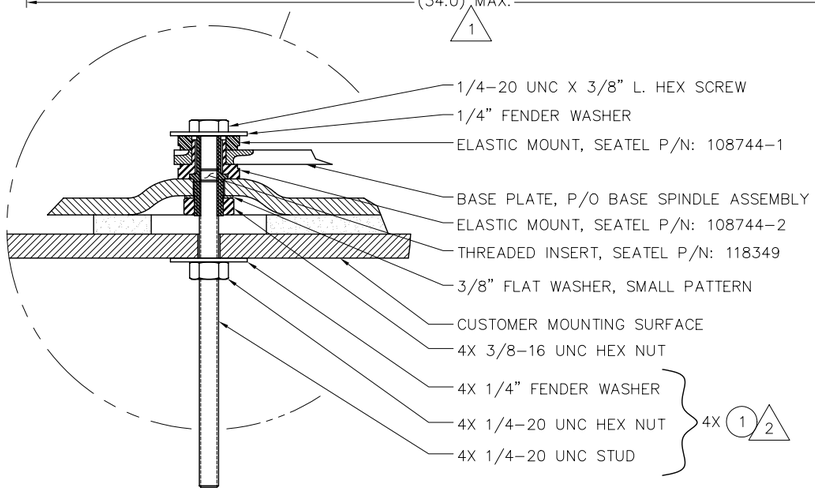

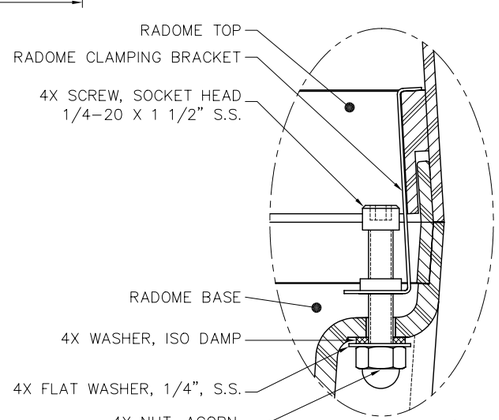

DETAIL 'B' 5
SCALE: NOT TO SCALE

NOTES: UNLESS OTHERWISE SPECIFIED

1. MINIMUM DIAMETER OF MAST MOUNTING PLATE EQUAL TO RADOME BASE DIAMETER.
2. HARDWARE SHOWN IS PART OF RADOME MOUNTING KIT HARDER P/N: 117426
3. APPLY ADHESIVE PER SEATEL SPEC. 121730
4. LOCATE SEATEL DECALS DIRECTLY AFT.
5. COMPONENTS LISTED ARE PART OF RADOME ASS'Y.

REFERENCE DRAWINGS

116715 RADOME ASS'Y, 20"
118302 RADOME ASS'Y, 27"
121498 RADOME ASS'Y, 34"
118092 TEMPLATE, RADOME INSTALLATION, 9–INCH HOLE PATTERN

COASTAL	SYSTEM WEIGHT
18	T.B.D.
20	T.B.D.
24	T.B.D.
30	T.B.D.

TOLERANCES UNLESS OTHERWISE SPECIFIED X.X = ±.050 X.XX = ±.020 X.XXX = ±.005 ANGLES: ±.5° INTERPRET TOLERANCING PER ASME Y14.5M – 1994	DRAWN BY: ALVARO DRAWN DATE: 08–31–05 APPROVED BY: APPROVED DATE:	Sea Tel® 4030 NELSON AVENUE CONCORD, CA 94520 Tel. 925–798–7979 Fax. 925–798–7986	
MATERIAL: N/A		TITLE: G. A. INSTALL COASTAL SERIES	
FINISH: N/A	SIZE: B / SCALE: 1:6	DRAWING NUMBER: 124736	REV: A1
3rd ANGLE PROJECTION	FIRST USED: COASTAL SERIES	SHEET NUMBER: 1 OF 2	

DOCUMENT NO. 124225–4_A

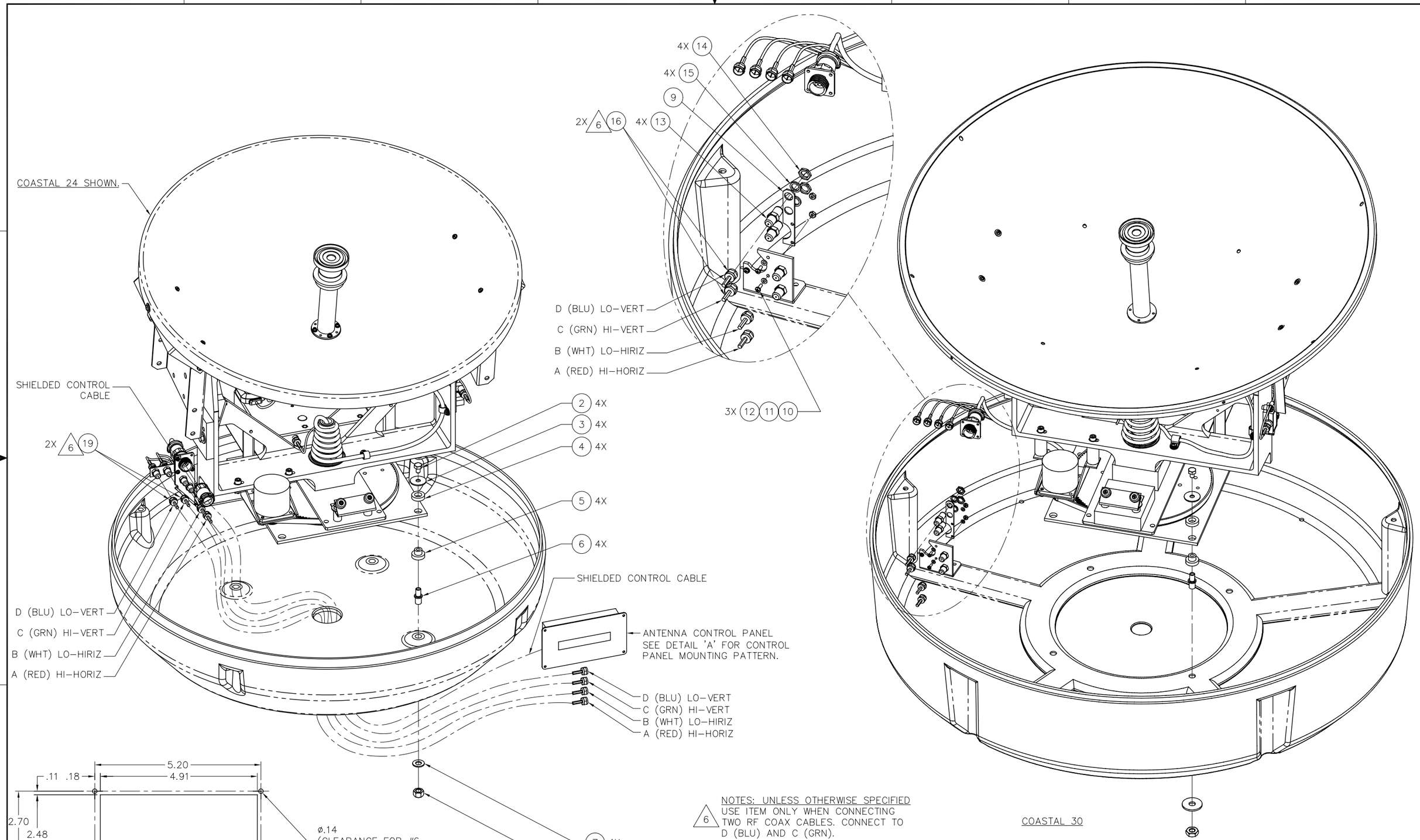

6 NOTES: UNLESS OTHERWISE SPECIFIED
USE ITEM ONLY WHEN CONNECTING
TWO RF COAX CABLES. CONNECT TO
D (BLU) AND C (GRN).

SIZE	SCALE:	DRAWING NUMBER:	REV:
B	NOT TO SCALE	124736	A1
		SHEET NUMBER: 2 OF 2	

DOCUMENT NO. 124225-4_A

REV.	ECO#	DATE	DESCRIPTION	BY
C2	N/A	7-20-05	ITEM 7 ADDED	MSF

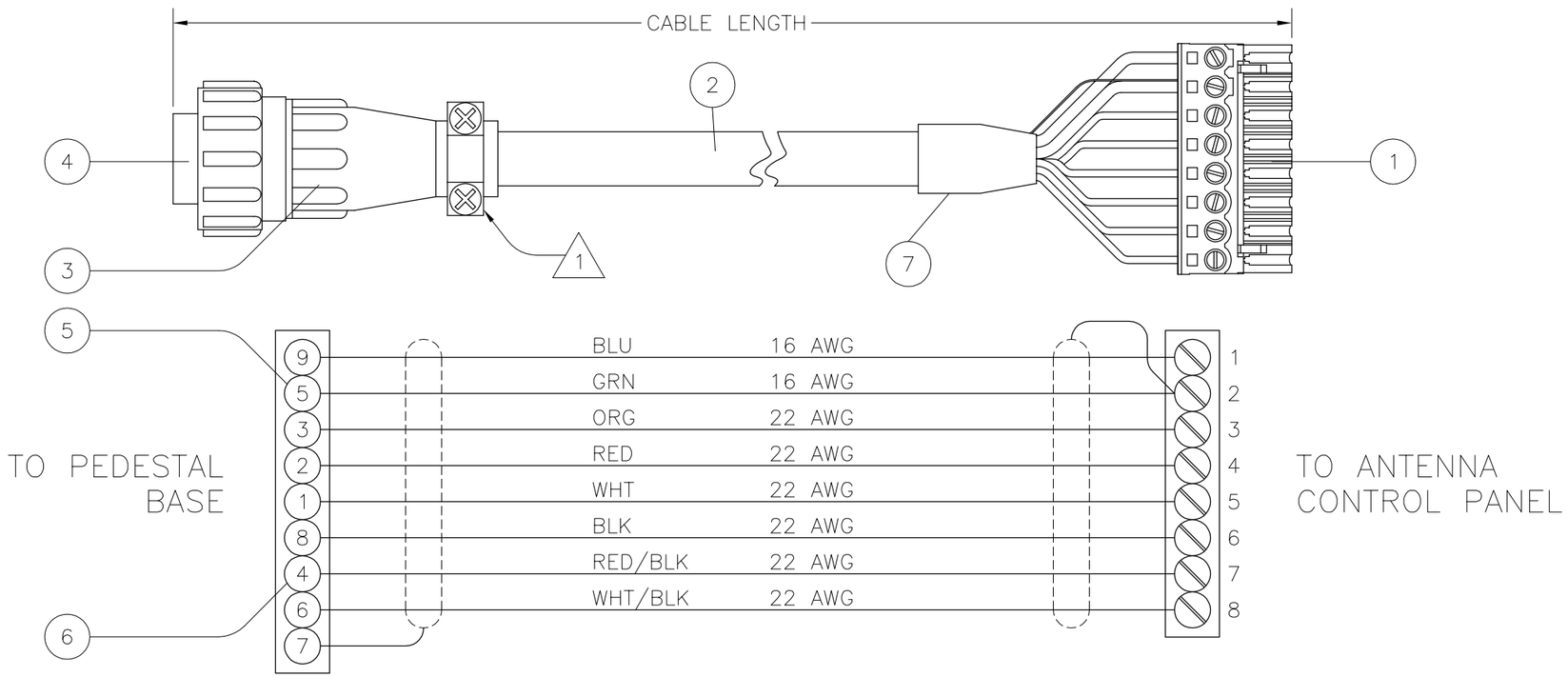

Dash No.	Cable Length
-1	35 ft.
-2	50 ft.
-3	75 ft.
-4	100 ft.
-5	150 ft.
-6	185 ft.
-7	20 ft.

ITEM	QTY	SEA TEL PART NO.	DRW SZ	DESCRIPTION	VALUE	REFERENCE/NOTES
1	1	117209-8	A	CONNECTOR, PLUG ø.2 LS	8-PIN	NEWARK #84F463
2	1	117231	A	CONTROL CABLE, CUSTOM	4 PAIR	
3	1	108926-16	A	CABLE CLAMP	SZ 13	AMP #206966-1
4	1	108926-15	A	CONNECTOR, CPC	9-PIN	AMP #206708-1
5	2	109294-10	A	AMP CONTACT(SOCKET)	18-16 AWG	AMP #66099-4
6	7	109294-6	A	AMP CONTACT(SOCKET)	24-20 AWG	AMP #66105-4
7	1	120117-070	A	HEAT SHRINK, 3/8 DIA, BLK, SUMITUBE B2	1.5"	

NOTES:
1. INSTALL CABLE CLAMP AT POSITION 2.

TOLERANCES
UNLESS OTHERWISE SPECIFIED

X.X = ± .050"
X.XX = ± .020"
X.XXX = ± .005"
ANGLES = ± 30'

3rd ANGLE PROJECTION

Sea Tel

SCALE: FULL	APPROVED BY:	DRAWN BY: AEF	
DATE: 12-02-98		DRAWING SIZE: B	
TITLE: SHIELDED CONTROL CABLE ASSEMBLY			
MODEL: 1898	SHEET: 1 OF 1	DRAWING NUMBER 117230	REVISION C2